HONDA

OWNER'S MANUAL

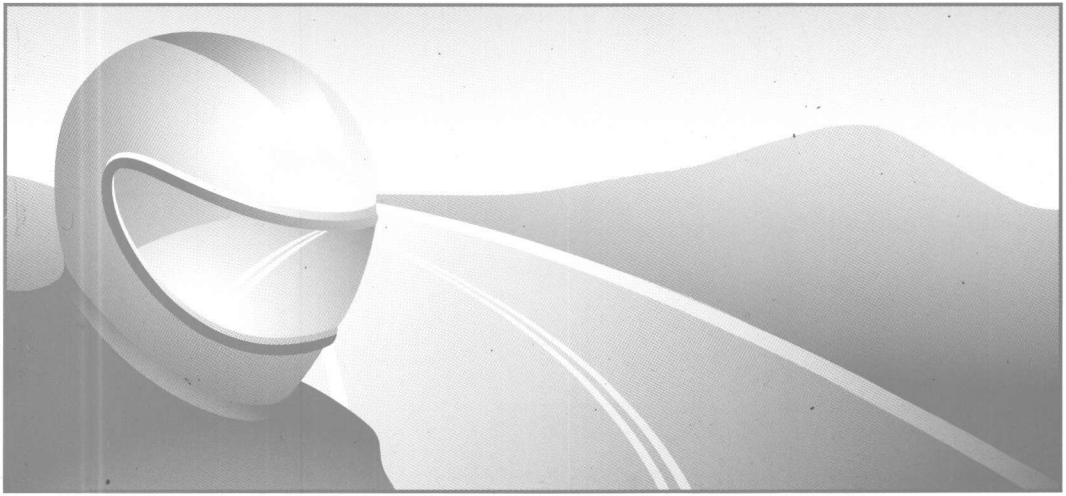

CB1100/A

Honda CB1100/A

OWNER'S MANUAL

© Honda Motor Co., Ltd. 2010

IMPORTANT INFORMATION

- **OPERATOR AND PASSENGER**
  This motorcycle is designed to carry the operator and one passenger. Never exceed the maximum weight capacity.

- **ON-ROAD USE**
  This motorcycle is designed to be used only on the road.

- **READ THIS OWNER'S MANUAL CAREFULLY**
  Pay special attention to the safety messages that appear throughout the manual. These messages are fully explained in the "A Few Words About Safety" section which appears before the Contents page.

  This manual should be considered a permanent part of the motorcycle and should remain with the motorcycle when resold.

Honda CB1100/A
OWNER'S MANUAL

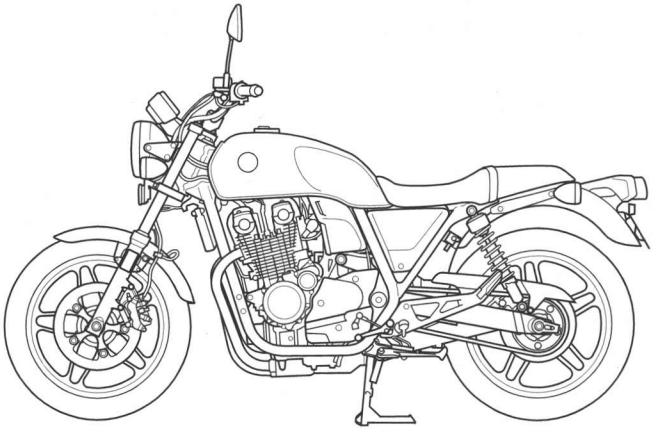

All information in this publication is based on the latest production information available at the time of approval for printing. Honda Motor Co.,Ltd. reserves the right to make changes at any time without notice and without incurring any obligation.
No part of this publication may be reproduced without written permission.

WELCOME

The motorcycle presents you a challenge to master the machine, a challenge to adventure. You ride through the wind, linked to the road by a vehicle that responds to your commands as no other does. Unlike an automobile, there is no metal cage around you. Like an airplane, a pre-ride inspection and regular maintenance are essential to your safety. Your reward is freedom.

To meet the challenges safely, and to enjoy the adventure fully, you should become thoroughly familiar with this owner's manual BEFORE YOU RIDE THE MOTORCYCLE.

As you read this manual, you will find information that is preceded by a NOTICE symbol. This information is intended to help you avoid damage to your motorcycle, other property, or the environment.

When service is required, remember that your Honda dealer knows your motorcycle best. If you have the required mechanical "know-how" and tools, your dealer can supply you with an official Honda Shop Manual to help you perform many maintenance and repair tasks.

Pleasant riding, and thank you for choosing a Honda !

- The following code in this manual indicates the country.
- The illustrations herein are based on the CB1100A type.

U	Australia	New Zealand

- The specifications may vary with each locale.

A FEW WORDS ABOUT SAFETY

Your safety, and the safety of others, is very important. And operating this motorcycle safely is an important responsibility.

To help you make informed decisions about safety, we have provided operating procedures and other information on labels and in this manual. This information alerts you to potential hazards that could hurt you or others.

Of course, it is not practical or possible to warn you about all hazards associated with operating or maintaining a motorcycle. You must use your own good judgment.

You will find important safety information in a variety of forms, including:

- **Safety Labels** — on the motorcycle.
- **Safety Messages** — preceded by a safety alert symbol ⚠ and one of three signal words: **DANGER, WARNING,** or **CAUTION**.

These signal words mean:

⚠ DANGER	**You WILL be KILLED or SERIOUSLY HURT if you don't follow instructions.**
⚠ WARNING	**You CAN be KILLED or SERIOUSLY HURT if you don't follow instructions.**
⚠ CAUTION	**You CAN be HURT if you don't follow instructions.**

- **Safety Headings** — such as Important Safety Reminders or Important Safety Precautions.
- **Safety Section** — such as Motorcycle Safety.
- **Instructions** — how to use this motorcycle correctly and safely.

This entire manual is filled with important safety information — please read it carefully.

OPERATION

page

1 MOTORCYCLE SAFETY

1 IMPORTANT SAFETY INFORMATION

2 PROTECTIVE APPAREL

4 LOAD LIMITS AND GUIDELINES

8 PARTS LOCATION

11 INSTRUMENTS AND INDICATORS

27 MAJOR COMPONENTS (Information you need to operate this motorcycle)

27 SUSPENSION

29 BRAKES

32 CLUTCH

34 FUEL

37 ENGINE OIL

38 TUBELESS TYRES

page

44 ESSENTIAL INDIVIDUAL COMPONENTS

44 IGNITION SWITCH

45 KEYS

47 IMMOBILIZER SYSTEM (HISS)

50 RIGHT HANDLEBAR CONTROLS

51 LEFT HANDLEBAR CONTROLS

page
52 FEATURES
(Not required for operation)
52 STEERING LOCK
53 SEAT
54 HELMET HOLDER
56 DOCUMENT BAG
57 CENTER COMPARTMENT
58 STORAGE COMPARTMENT FOR U-SHAPED ANTI-THEFT LOCK
59 SIDE COVERS
60 HEADLIGHT AIM VERTICAL ADJUSTMENT
61 CLIP

page
62 OPERATION
62 PRE-RIDE INSPECTION
64 STARTING THE ENGINE
68 RUNNING-IN
69 RIDING
71 BRAKING
75 PARKING
76 ANTI-THEFT TIPS

MAINTENANCE

page

77 MAINTENANCE

77 THE IMPORTANCE OF MAINTENANCE
78 MAINTENANCE SAFETY
79 SAFETY PRECAUTIONS
80 MAINTENANCE SCHEDULE
83 TOOL KIT
84 SERIAL NUMBERS
85 COLOUR LABEL
86 ENGINE OIL
91 CRANKCASE BREATHERS
92 SPARK PLUGS
94 THROTTLE OPERATION
95 AIR CLEANER
97 DRIVE CHAIN
103 DRIVE CHAIN SLIDER
104 FRONT AND REAR SUSPENSION INSPECTION
105 SIDE STAND
106 WHEEL REMOVAL

page

112 BRAKE PAD WEAR
114 BATTERY
117 FUSE REPLACEMENT
120 BRAKELIGHT SWITCH ADJUSTMENT
121 BULB REPLACEMENT

125 CLEANING

129 STORAGE GUIDE

129 STORAGE
131 REMOVAL FROM STORAGE

132 TAKING CARE OF THE UNEXPECTED

133 SPECIFICATIONS

137 CATALYTIC CONVERTER

MOTORCYCLE SAFETY

IMPORTANT SAFETY INFORMATION

Your motorcycle can provide many years of service and pleasure — if you take responsibility for your own safety and understand the challenges that you can meet on the road.

There is much that you can do to protect yourself when you ride. You'll find many helpful recommendations throughout this manual. Following are a few that we consider to be most important.

Always Wear a Helmet

It's a proven fact: helmets significantly reduce the number and severity of head injuries. So always wear an approved motorcycle helmet and make sure your passenger does the same. We also recommend that you wear eye protection, sturdy boots, gloves, and other protective gear (page 2).

Make Yourself Easy to See

Some drivers do not see motorcycles because they are not looking for them. To make yourself more visible, wear bright reflective clothing, position yourself so other drivers can see you, signal before turning or changing lanes, and use your horn when it will help others notice you.

Ride Within Your Limits

Pushing the limits is another major cause of motorcycle crashes. Never ride beyond your personal abilities or faster than conditions warrant. Remember that alcohol, drugs, fatigue and inattention can significantly reduce your ability to make good judgements and ride safely.

Don't Drink and Ride

Alcohol and riding don't mix. Even one drink can reduce your ability to respond to changing conditions, and your reaction time gets worse with every additional drink. So don't drink and ride, and don't let your friends drink and ride either.

Keep Your Bike in Safe Condition

For safe riding, it's important to inspect your motorcycle before every ride and perform all recommended maintenance. Never exceed load limits, and only use accessories that have been approved by Honda for this motorcycle. See page 4 for more details.

PROTECTIVE APPAREL

For your safety, we strongly recommend that you always wear an approved motorcycle helmet, eye protection, boots, gloves, trousers, and a long-sleeved shirt or jacket whenever you ride. Although complete protection is not possible, wearing proper gear can reduce the chance of injury when you ride.

Following are suggestions to help you choose proper gear.

⚠ WARNING

Not wearing a helmet increases the chance of serious injury or death in a crash.

Be sure you and your passenger always wear a helmet, eye protection and other protective apparel when you ride.

Helmets and Eye Protection

Your helmet is your most important piece of riding gear because it offers the best protection against head injuries. A helmet should fit your head comfortably and securely. A bright-coloured helmet can make you more noticeable in traffic, as can reflective strips.

An open-face helmet offers some protection, but a full-face helmet offers more. Always wear a face shield or goggles to protect your eyes and help your vision.

Additional Riding Gear

In addition to a helmet and eye protection, we also recommend:

- Sturdy boots with non-slip soles to help protect your feet and ankles.
- Leather gloves to keep your hands warm and help prevent blisters, cuts, burns and bruises.
- A motorcycle riding suit or jacket for comfort as well as protection. Bright-coloured and reflective clothing can help make you more noticeable in traffic. Be sure to avoid loose clothes that could get caught on any part of your motorcycle.

LOAD LIMITS AND GUIDELINES

Your motorcycle has been designed to carry you and one passenger. When you carry a passenger, you may feel some difference during acceleration and braking. But so long as you keep your motorcycle well-maintained, with good tyres and brakes, you can safely carry loads within the given limits and guidelines.

However, exceeding the weight limit or carrying an unbalanced load can seriously affect your motorcycle's handling, braking and stability. Non-Honda accessories, improper modifications, and poor maintenance can also reduce your safety margin.

The following pages give more specific information on loading, accessories and modifications.

Loading

How much weight you put on your motorcycle, and how you load it, are important to your safety. Anytime you ride with a passenger or cargo you should be aware of the following information.

⚠ WARNING

Overloading or improper loading can cause a crash and you can be seriously hurt or killed.

Follow all load limits and other loading guidelines in this manual.

Load Limits

Following are the load limits for your motorcycle:

Maximum weight capacity:
172 kg (379 lb)
Includes the weight of the rider, passenger, all cargo and all accessories

Maximum cargo weight:
10 kg (22 lb)

The weight of added accessories will reduce the maximum cargo weight you can carry.

Loading Guidelines

Your motorcycle is primarily intended for transporting you and a passenger. You may wish to secure a jacket or other small items to the seat when you are not riding with a passenger.

If you wish to carry more cargo, check with your Honda dealer for advice, and be sure to read the information regarding accessories on page 6 .

Improperly loading your motorcycle can affect its stability and handling. Even if your motorcycle is properly loaded, you should ride at reduced speeds and never exceed 130 km/h (80 mph) when carrying cargo.

Follow these guidelines whenever you carry a passenger or cargo:

- Check that both tyres are properly inflated (page 38).
- If you change your normal load, you may need to adjust the front suspension (page 27) and the rear suspension (page 28).
- To prevent loose items from creating a hazard, make sure that all cargo is securely tied down before you ride away.
- Place cargo weight as close to the center of the motorcycle as possible.
- Balance cargo weight evenly on both sides.

Accessories and Modifications

Modifying your motorcycle or using non-Honda accessories can make your motorcycle unsafe. Before you consider making any modifications or adding an accessory, be sure to read the following information.

⚠ WARNING

Improper accessories or modifications can cause a crash in which you can be seriously hurt or killed.

Follow all instructions in this owner's manual regarding accessories and modifications.

Accessories

We strongly recommend that you use only Honda Genuine Accessories that have been specifically designed and tested for your motorcycle. Because Honda cannot test all other accessories, you must be personally responsible for proper selection, installation and use of non-Honda accessories. Check with your dealer for assistance and always follow these guidelines:

- Make sure the accessory does not obscure any lights, reduce ground clearance and banking angle, limit suspension travel or steering travel, alter your riding position or interfere with operating any controls.

- Be sure electrical equipment does not exceed the motorcycle's electrical system capacity (page 136). A blown fuse can cause a loss of lights or engine power.

- Do not pull a trailer or sidecar with your motorcycle. This motorcycle was not designed for these attachments, and their use can seriously impair your motorcycle's handling.

Modifications

We strongly advise you not to remove any original equipment or modify your motorcycle in any way that would change its design or operation. Such changes could seriously impair your motorcycle's handling, stability and braking, making it unsafe to ride.

Removing or modifying your lights, mufflers, emission control system or other equipment can also make your motorcycle illegal.

PARTS LOCATION

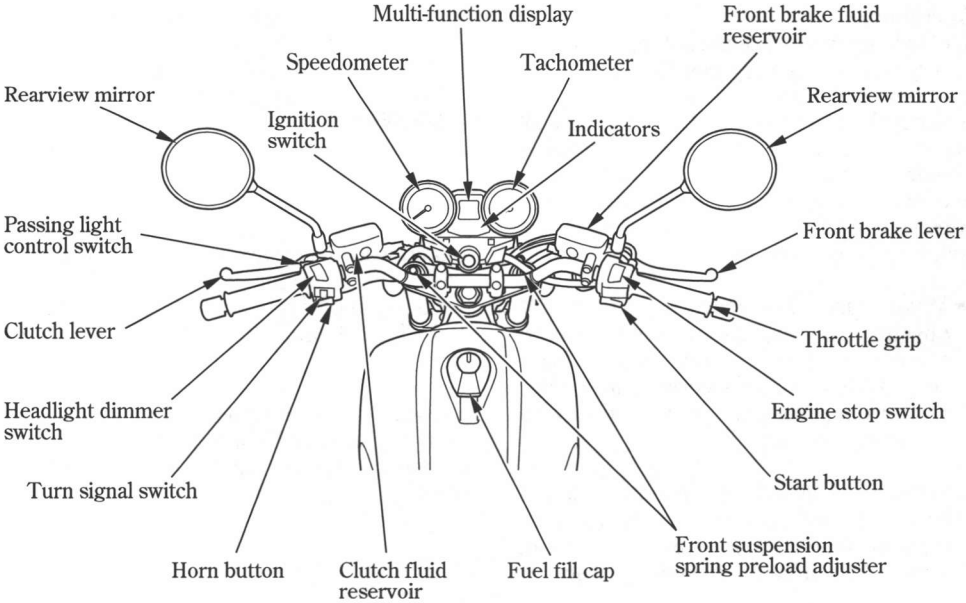

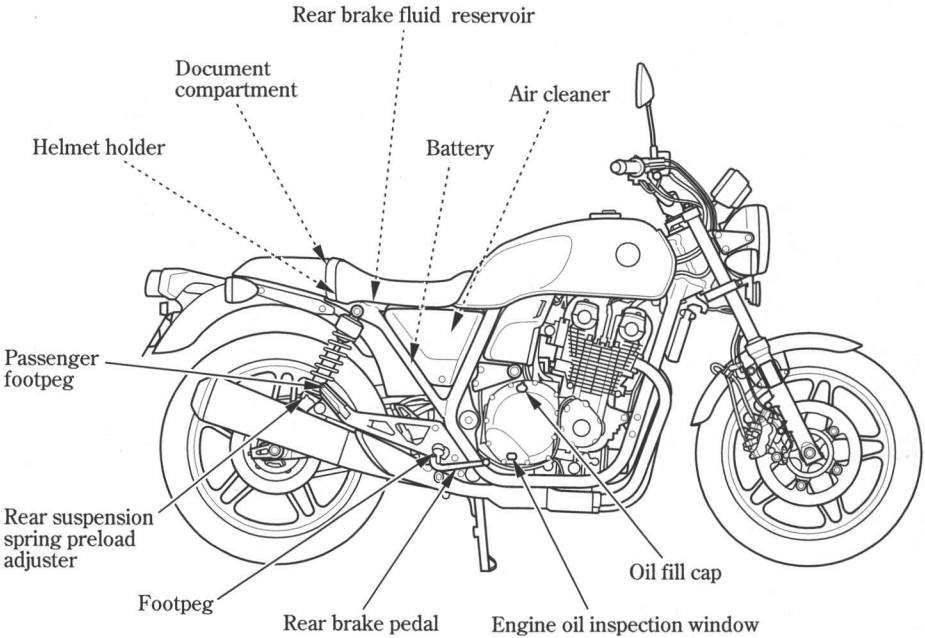
Rear brake fluid reservoir
Document compartment
Air cleaner
Helmet holder
Battery
Passenger footpeg
Rear suspension spring preload adjuster
Oil fill cap
Footpeg
Rear brake pedal
Engine oil inspection window

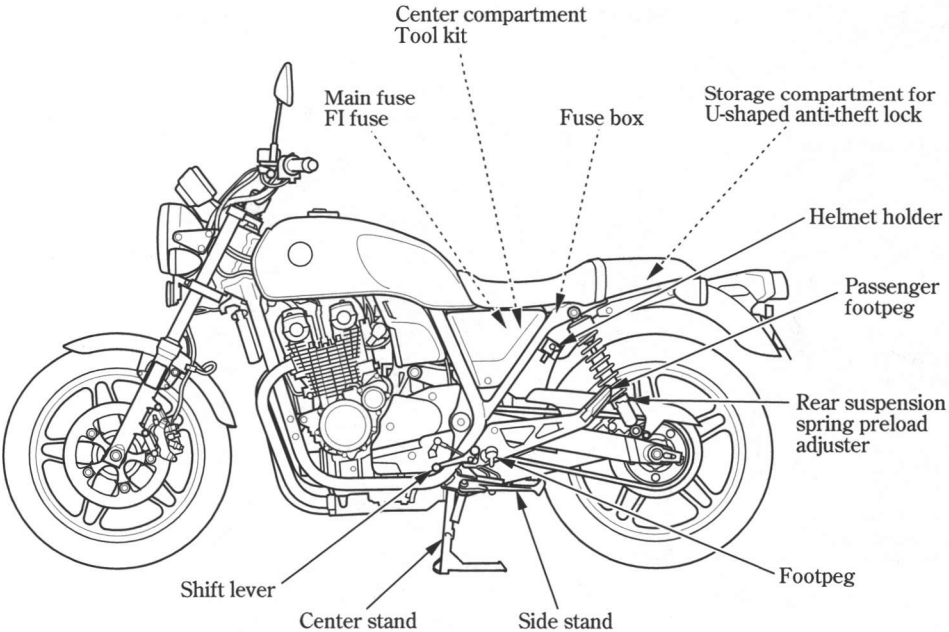
Center compartment
Tool kit
Main fuse
FI fuse
Fuse box
Storage compartment for
U-shaped anti-theft lock
Helmet holder
Passenger
footpeg
Rear suspension
spring preload
adjuster
Footpeg
Shift lever
Center stand
Side stand

INSTRUMENTS AND INDICATORS

The indicators are contained in the instrument panel. Their functions are described in the tables on the following pages.

(1) Tachometer
(2) Tachometer red zone
(3) Anti-lock Brake System (ABS) indicator (CB1100A)
(4) Right control button
(5) Right turn signal indicator
(6) High beam indicator
(7) Neutral indicator
(8) High oil temperature indicator
(9) Left turn signal indicator
(10) Left control button
(11) Speedometer
(12) Immobilizer system (HISS) indicator
(13) PGM-FI malfunction indicator lamp (MIL)
(14) Multi-function display
(15) Low oil pressure indicator

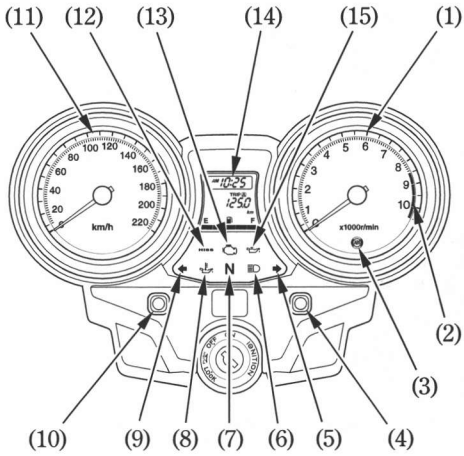

(Ref.No.) Description	Function
(1) Tachometer	Shows engine revolutions per minute. The tachometer needle will swing to the maximum scale on the dial once when the ignition switch is turned ON.
(2) Tachometer red zone	Never allow the tachometer needle to enter the red zone, even after the engine has been broken in. **NOTICE** Running the engine beyond recommended maximum engine speed (the beginning of the tachometer red zone) can damage the engine.
(3) Anti-lock Brake System (ABS) indicator (amber) (CB1100A)	This indicator normally comes on when the ignition switch is turned ON, and goes off after you ride the motorcycle at speed above 10 km/h (6 mph). If there is a problem with the Anti-lock Brake System, this indicator flashes and remains on (page 74).

(Ref.No.) Description	Function
(4) Right control button	Use this button for the following purposes. • To reset tripmeter • To adjust time
(5) Right turn signal indicator (green)	Flashes when the right turn signal operates.
(6) High beam indicator (blue)	Lights when the headlight is on high beam.
(7) Neutral indicator (green)	Lights when the transmission is in neutral.

(Ref.No.) Description	Function
(8) High oil temperature indicator (red)	Lights when the engine oil is over the specified temperature. Should also light for a few seconds and then go off when the ignition switch is turned ON and engine stop switch is at ○ (RUN). The indicator may come on when idling or riding at very low speeds for a long time at high air temperature. If the indicator comes on while idling or riding, stop the engine and let it cool down. If the indicator remains on or lights again, take the motorcycle to your Honda dealer as soon as possible. **NOTICE** • Idling or riding with the indicator on may cause serious engine damage. • Do not "BLIP" the throttle (open and close rapidly) or idle for a long time, as the engine may be damaged by overheating. Do not leave the motorcycle unattended while the engine is running.

(Ref.No.) Description	Function
(9) Left turn signal indicator (green)	Flashes when the left turn signal operates.
(10) Left control button	Use this button for the following purposes. • To select display mode • To adjust time • To switch blinking of the immobilizer system (HISS) indicator
(11) Speedometer	Shows riding speed. The speedometer needle will swing to the maximum scale on the dial once when the ignition switch is turned ON.

(Ref.No.) Description	Function
(12) Immobilizer system (HISS) indicator (red)	This indicator lights for a few seconds when the ignition switch is turned ON and the engine stop switch is at ○ (RUN). It will then go off if the properly-coded key has been inserted. If an improperly-coded key has been inserted, the indicator will remain on and the engine will not start (page 47). When the blinking function of this indicator is valid and the ignition switch is OFF, it keeps blinking for 24 hours (page 47).
(13) PGM-FI malfunction indicator lamp (MIL) (amber)	Lights when there is any abnormality in the PGM-FI (Programmed Fuel Injection) system. Should also light for a few seconds and then go off when the ignition switch is turned ON and engine stop switch is at ○ (RUN). If it comes on at any other time, reduce speed and take the motorcycle to your Honda dealer as soon as possible.

(Ref.No.) Description		Function
(14) Multi-function display		The display includes the following functions; This display shows the initial display (page 18).
	Odometer	Shows accumulated mileage (page 20).
	Tripmeter A and B	Shows mileage per trip (page 20).
	Fuel gauge and digital clock	Shows approximate fuel supply available (page 22). Shows hour and minute (page 24).
(15) Low oil pressure indicator (red)		Lights when the engine oil pressure is below normal operating range. Should light when ignition switch is ON and engine is not running. Should go out when the engine starts, except for occasional flickering at or near idling speed when engine is warm. **NOTICE** Running the engine with insufficient oil pressure may cause serious engine damage.

Initial Display

When the ignition switch is turned ON, the multi-function display (1) will temporarily show all the modes and digital segments so that you can make sure the liquid crystal display is functioning properly.

Digital clock will reset if the battery is disconnected.

(1) Multi-function display

Multi-function Display

The multi-function display (1) includes the following functions:

Odometer/Tripmeter
Fuel gauge
Digital clock

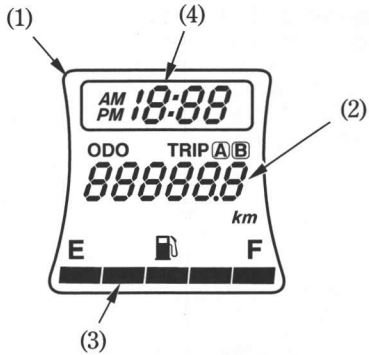

(1) Multi-function display
(2) Odometer/Tripmeter
(3) Fuel gauge
(4) Digital clock

Odometer/Tripmeter

The display (1) has two functions, odometer and two tripmeter.

Press the left control button (2) to select "ODO" (Odometer), "TRIP A" (Tripmeter A) or "TRIP B" (Tripmeter B) mode.

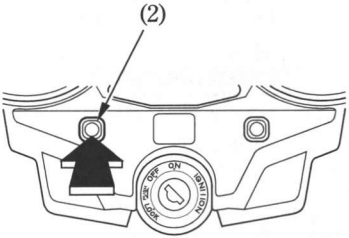

(1) Multi-function display
(2) Left control button

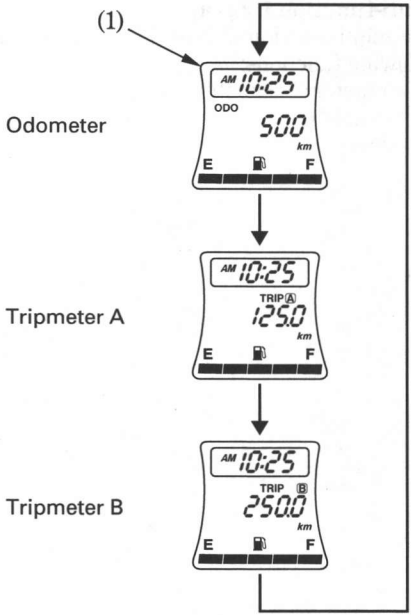

To reset the tripmeter, press and hold the right control button (3) for more than 2 seconds when the display is in the "TRIP A" or "TRIP B" mode.

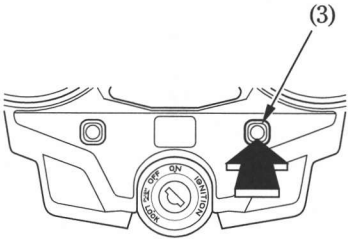

(3) Right control button

Tripmeter reset

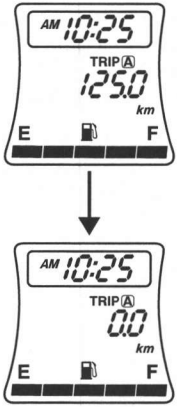

Fuel Gauge

The fuel gauge liquid crystal display (1) shows the approximate fuel supply available in a graduated display. When the segment F (2) goes on, the fuel tank is full. Fuel tank capacity, including reserve:

14.6 ℓ (3.86 US gal , 3.21 Imp gal)

When segment E (3) flashes, fuel will be low and you should refill the tank as soon as possible.

The amount of fuel left in the tank with the vehicle set upright is approximately:

3.5 ℓ (0.92 US gal , 0.77 Imp gal)

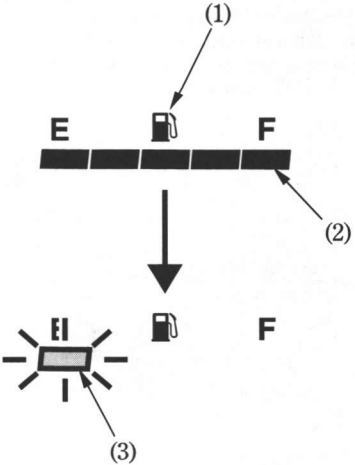

(1) Fuel gauge liquid crystal display
(2) Segment F
(3) Segment E

Fuel Gauge Failure Indication:
If the fuel system has an error, the fuel gauge indicators will be displayed as shown in the illustration.
If this occurs, see your Honda dealer as soon as possible.

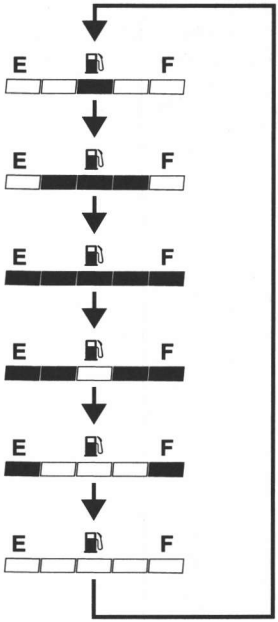

Digital Clock

Shows hour and minute. To adjust the time, proceed as follows:

1. Turn the ignition switch ON.

2. Press and hold both the left control button (1) and right control button (2) for more than 2 seconds. The clock will be set in the adjust mode with the hour display flashing.

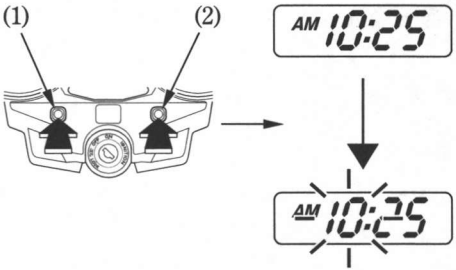

(1) Left control button
(2) Right control button

3. To set the hour, press the right control button until the desired hour and AM/PM are displayed.
   - The time is advanced by one hour each time the button is pressed.
   - The time advances fast when the button is pressed and held.

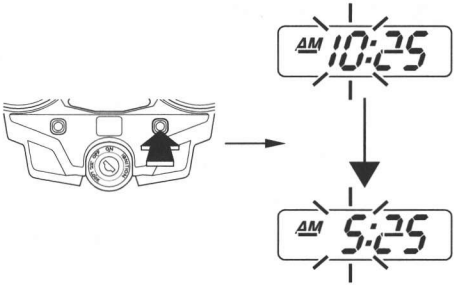

4. Press the left control button. The minute display will start flashing.

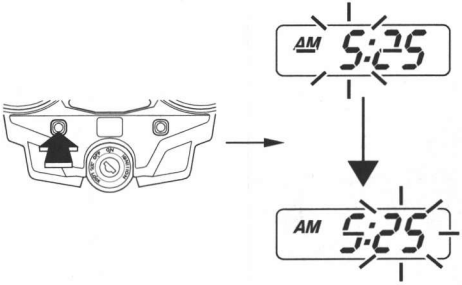

5. To set the minute, press the right control button until the desired minute. The minute display will return to "00" when "60" is reached without affecting the hour display.
   - The time advances by one minute, each time the button is pressed.
   - The time advances fast when the button is pressed and held.

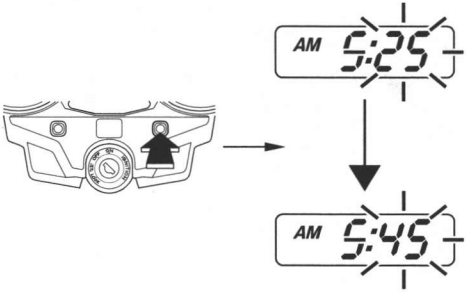

6. To end the adjustment, press and hold the left control button and right control button for more than 2 seconds or turn the ignition switch OFF.
   If no operation is performed for 30 seconds during the time adjustment mode, the adjustment will be cancelled.

   The clock will be reset AM 1:00 if the battery is disconnected.

MAJOR COMPONENTS
(Information you need to operate this motorcycle)

SUSPENSION

Front Suspension

Spring Preload:

Adjust the spring preload by turning the spring preload adjuster (1) with the No.2 screwdriver provided in the tool kit (page 83).

Make sure that both fork legs are adjusted to the same position.

To reduce (SOFT) :

Turn the adjuster counterclockwise toward SOFT for a light load and smooth road condition.

To increase (HARD) :

Turn the adjuster clockwise toward HARD for a firmer ride and rough road condition.

Standard Position:

To return to the standard position, turn the adjusters until the third groove from the top aligns with the top surface of the fork caps.

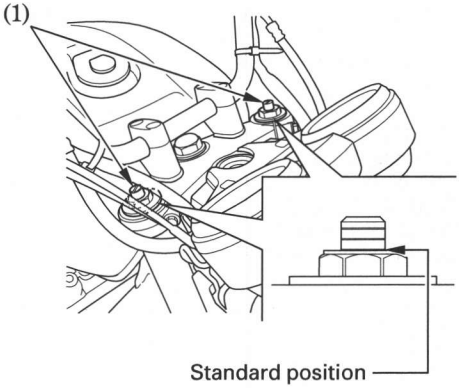

(1) Spring preload adjuster

Rear Suspension

Spring Preload:

Each shock absorber (1) has 5 adjustment positions for different load or riding conditions.

Use a pin spanner (2) and extension bar (3) to adjust the rear shocks.

Always adjust the shock absorber position in sequence (1-2-3-4-5 or 5-4-3-2-1).

Attempting to adjust directly from 1 to 5 or 5 to 1 may damage the shock absorber.

Position 1 is for light loads and smooth road conditions. Positions 3 to 5 increase spring preload for a stiffer rear suspension, and can be used when the motorcycle is heavily loaded. Be certain to adjust both shock absorbers to the same position.

Standard position: 2

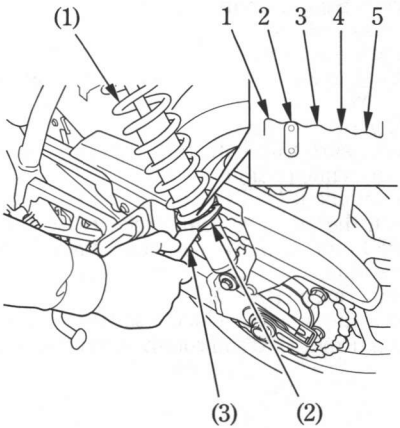

(1) Shock absorber
(2) Pin spanner
(3) Extension bar

BRAKES

Both the front and rear brakes are the hydraulic disc types.

As the brake pads wear, the brake fluid level drops.

There are no adjustments to perform, but fluid level and pad wear must be inspected periodically. The system must be inspected frequently to ensure there are no fluid leaks. If the control lever or pedal free travel becomes excessive and the brake pads are not worn beyond the recommended limit (page 112), there is probably air in the brake system and it must be bled. See your Honda dealer for this service.

Front Brake Fluid Level:

With the motorcycle in an upright position, check the fluid level. It should be above the LOWER level mark (1). If the level is at or below the LOWER level mark, check the brake pads for wear (page 112).

Worn pads should be replaced. If the pads are not worn, have your brake system inspected for leaks.

The recommended brake fluid is Honda DOT 4 brake fluid from a sealed container, or an equivalent.

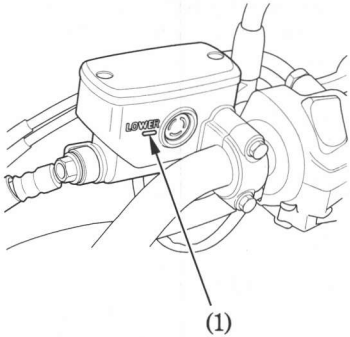

(1) LOWER level mark

Front Brake Lever:

The distance between the tip of the brake lever (1) and the grip can be adjusted by turning the adjuster dial (2) while pushing the lever forward.

Align the numbers (3) on the adjuster dial with the index mark (4).

Apply the brake several times and check for free wheel rotation after the brake lever is released.

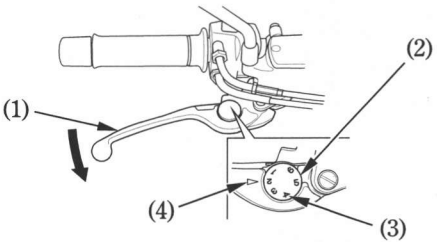

(1) Brake lever
(2) Adjuster dial
(3) Numbers
(4) Index mark

Other Checks:

Make sure there are no fluid leaks. Check for deterioration or cracks in the hoses and fittings.

Rear Brake Fluid Level:
The rear brake fluid reservoir (1) is located below the seat (page 53).

With the motorcycle in an upright position, check the fluid level. It should be between the UPPER (2) and LOWER (3) level marks. If the level is at or below the LOWER level mark, check the brake pads for wear (page113).

Worn pads should be replaced. If the pads are not worn, have your brake system inspected for leaks.

The recommended brake fluid is Honda DOT 4 brake fluid from a sealed container, or an equivalent.

Other Checks:
Make sure there are no fluid leaks. Check for deterioration or cracks in the hoses and fittings.

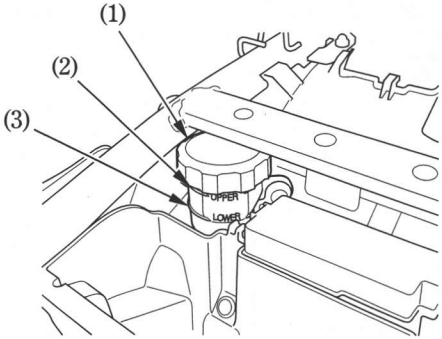

(1) Rear brake fluid reservoir
(2) UPPER level mark
(3) LOWER level mark

CLUTCH

This motorcycle has a hydraulically actuated clutch. There are no adjustments to perform, but the clutch system must be inspected periodically for fluid level and leakage.

If the motorcycle creeps or stalls when shifted into gear, or if the clutch slips, causing acceleration to lag behind engine speed, there is probably air in the clutch system and it must be bled out. See your Honda dealer for this service.

Fluid Level:

Check that the fluid level is above the LOWER level mark (1) with the motorcycle in an upright position. If the fluid level is near the lower level line, it indicates fluid leakage. See your Honda dealer.

Other Checks:

Make sure there are no fluid leaks. Check for deterioration or cracks in the hoses and fittings.

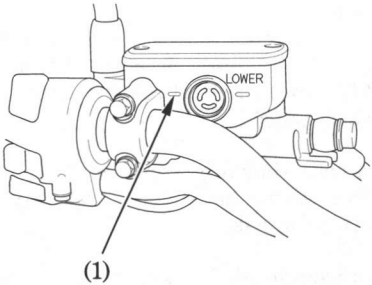

(1) LOWER level mark

Clutch Lever:
The distance between the tip of the clutch lever (1) and the grip can be adjusted by turning the adjuster dial (2).
Turn the adjuster dial while pushing the clutch lever forward.
Align the numbers (3) on the adjuster dial with index mark (4).

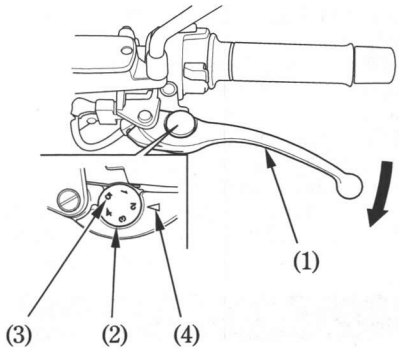

(1) Clutch lever
(2) Adjuster dial
(3) Numbers
(4) Index mark

FUEL

Fuel Tank

The fuel tank capacity including the reserve supply is:

14.6 ℓ (3.86 US gal , 3.21 Imp gal)

To open the fuel fill cap (1), insert the ignition key (2) and turn it clockwise. The fuel fill cap is hinged and will lift up.

Do not overfill the tank. There should be no fuel in the filler neck (3).

After refueling, to close the fuel fill cap, push the fuel fill cap into the filler neck until it snaps closed and locks. Remove the key.

⚠ WARNING

Petrol is highly flammable and explosive. You can be burned or seriously injured when handling fuel.

- Stop the engine and keep heat, sparks, and flame away.
- Refuel only outdoors.
- Wipe up spills immediately.

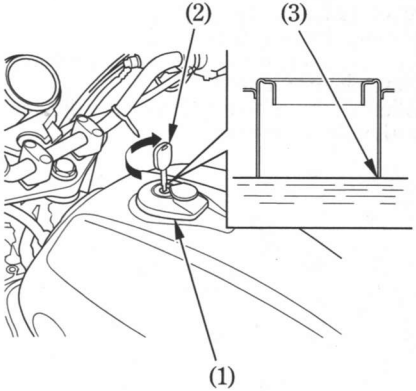

(1) Fuel fill cap
(2) Ignition key
(3) Filler neck

Use unleaded petrol with a research octane number of 91 or higher.
The use of leaded petrol will cause premature damage to the catalytic converter.

NOTICE

If "spark knock" or "pinking" occurs at a steady engine speed under normal load, change brands of petrol. If spark knock or pinking persists, consult your Honda dealer. Failure to do so is considered misuse, and damage caused by misuse is not covered by Honda's Limited Warranty.

Petrol Containing Alcohol

If you decide to use a petrol containing alcohol (gasohol), be sure it's octane rating is at least as high as that recommended by Honda. There are two types of "gasohol": one containing ethanol, and the other containing methanol. Do not use petrol that contains more than 10 % ethanol. Do not use petrol containing methanol (methyl or wood alcohol) that does not also contain cosolvents and corrosion inhibitors for methanol. Never use petrol containing more than 5 % methanol, even if it has cosolvents and corrosion inhibitors.

The use of petrol containing more than 10 % ethanol (or more than 5 % methanol) may:

- Damage the painting of the fuel tank.
- Damage the rubber tubes of the fuel line.
- Cause corrosion of the fuel tank.
- Cause poor drivability.

Before buying fuel from an unfamiliar station, try to find out if the fuel contains alcohol. If it does, confirm the type and percentage of alcohol used. If you notice any undesirable operating symptoms while using a petrol that contains alcohol, or one that you think contains alcohol, switch to a petrol that you know does not contain alcohol.

ENGINE OIL

Engine Oil Level Check

Check the engine oil level each day before riding the motorcycle.

The level must be maintained between the upper (1) and lower (2) level marks in the inspection window (3).

1. Start the engine and let it idle for 3–5 minutes. Make sure the low oil pressure indicator goes off. If the indicator light remains on, stop the engine immediately.
2. Stop the engine and put the motorcycle on its center stand on level ground.
3. After 2–3 minutes, check that the oil level is between the upper and lower level marks in the inspection window.
   - If required, clean the inspection window by turning the wiper (4).
4. If required, remove the oil fill cap (5) and add the specified oil (page 86) up to the upper level mark. Do not overfill.
5. Reinstall the oil fill cap. Check for oil leaks.

NOTICE

Running the engine with insufficient oil pressure may cause serious engine damage.

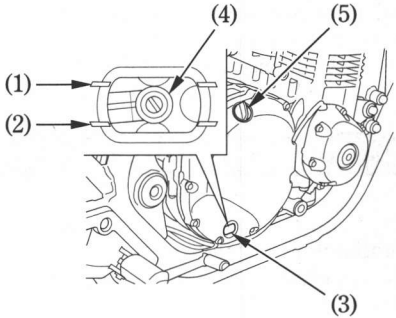

(1) Upper level mark
(2) Lower level mark
(3) Inspection window
(4) Wiper
(5) Oil fill cap

TUBELESS TYRES

To safely operate your motorcycle, your tyres must be the proper type and size, in good condition with adequate tread, and correctly inflated for the load you are carrying. The following pages give more detailed information on how and when to check your air pressure, how to inspect your tyres for damage, and what to do when your tyres need to be repaired or replaced.

⚠ WARNING

Using tyres that are excessively worn or improperly inflated can cause a crash in which you can be seriously hurt or killed.

Follow all instructions in this owner's manual regarding tyre inflation and maintenance.

Air Pressure

Keeping your tyres properly inflated provides the best combination of handling, tread life and riding comfort. Generally, underinflated tyres wear unevenly, adversely affect handling, and are more likely to fail from being overheated.
Overinflated tyres make your motorcycle ride harshly, are more prone to damage from road hazards, and wear unevenly.

We recommend that you visually check your tyres before every ride and use a gauge to measure air pressure at least once a month or any time you think the tyres might be low.
Tubeless tyres have some self-sealing ability if they are punctured. However, because leakage is often very slow, you should look closely for punctures whenever a tyre is not fully inflated.

Always check air pressure when your tyres are "cold" – when the motorcycle has been parked for at least three hours. If you check air pressure when your tyres are "warm" – when the motorcycle has been ridden for even a few miles – the readings will be higher than if the tyres were "cold". This is normal, so do not let air out of the tyres to match the recommended cold air pressures given below. If you do, the tyres will be underinflated.

The recommended "cold" tyre pressures are:

kPa (kgf/cm², psi)		
Driver only	Front Rear	250 (2.50 , 36) 290 (2.90 , 42)
Driver and one passenger	Front Rear	250 (2.50 , 36) 290 (2.90 , 42)

Inspection

Whenever you check the tyre pressures, you should also examine the tyre treads and sidewalls for wear, damage, and foreign objects:

Look for:

- Bumps or bulges in the side of the tyre or the tread. Replace the tyre if you find any bumps or bulges.
- Cuts, splits or cracks in the tyre. Replace the tyre if you can see fabric or cord.
- Excessive tread wear.

Also, if you hit a pothole or hard object, pull to the side of the road as soon as you can safely and carefully inspect the tyres for damage.

Tread Wear

Replace tyres before tread depth at the center of the tyre reaches the following limit:

Minimum tread depth	
Front:	1.5 mm (0.06 in)
Rear:	2.0 mm (0.08 in)

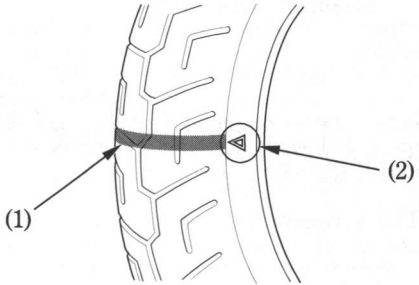

(1) Wear indicator
(2) Wear indicator location mark

Tyre Repair

If a tyre is punctured or damaged, you should replace it, not repair it. As discussed below, a tyre that is repaired, either temporarily or permanently, will have lower speed and performance limits than a new tyre.

A temporary repair, such as an external tubeless tyre plug, may not be safe for normal speeds and riding conditions. If a temporary or emergency repair is made to a tyre, you should ride slowly and cautiously to a dealer and have the tyre replaced. If possible, you should not carry a passenger or cargo until a new tyre is installed.

Even if a tyre is professionally repaired with a permanent internal patch plug, it will not be as good as a new tyre. You should not exceed 80 km/h (50 mph) for the first 24 hours, or 130 km/h (80 mph) at any time thereafter. In addition, you may not be able to safely carry as much weight as with a new tyre. Therefore, we strongly recommend that you replace a damaged tyre. If you choose to have a tyre repaired, be sure the wheel is balanced before you ride.

Tyre Replacement

The tyres that came on your motorcycle were designed to match the performance capabilities of your motorcycle and provide the best combination of handling, braking, durability and comfort.

⚠ WARNING

Installing improper tyres on your motorcycle can affect handling and stability. This can cause a crash in which you can be seriously hurt or killed.

Always use the size and type of tyres recommended in this owner's manual.

The recommended tyres for your motorcycle are:

Front: 110/80R18M/C 58V
BRIDGESTONE
BT-54F RADIAL G
DUNLOP
D205F

Rear: 140/70R18M/C 67V
BRIDGESTONE
BT-54R RADIAL G
DUNLOP
D205

Type: radial, tubeless

Whenever you replace a tyre, use one that is equivalent to the original and be sure the wheel is balanced after the new tyre is installed.

Important Safety Reminders

- Have the wheel balanced·Honda Genuine balance weights or equivalents.
- Do not install a tube inside a tubeless tyre on this motorcycle. Excessive heat build-up can cause the tube to burst.
- Use only tubeless tyres on this motorcycle. The rims are designed for tubeless tyres, and during hard acceleration or braking, a tube-type tyre could slip on the rim and cause the tyre to rapidly deflate.

ESSENTIAL INDIVIDUAL COMPONENTS

IGNITION SWITCH

The ignition switch (1) is below the indicator panel.

The headlight and taillight will come on whenever you turn the ignition switch ON. If your motorcycle is stopped with the ignition switch ON and the engine is not running, the headlight and taillight will still be on, resulting in battery discharge.

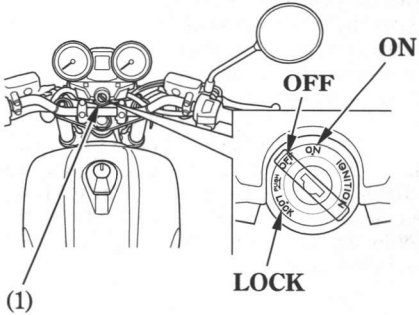

(1) Ignition switch

Key Position	Function	Key Removal
LOCK (Steering lock)	Steering is locked. Engine and lights cannot be operated.	Key can be removed
OFF	Engine and lights cannot be operated.	Key can be removed
ON	Engine and lights can be operated.	Key cannot be removed

KEYS

This motorcycle has two keys (1) and a key number plate (2).

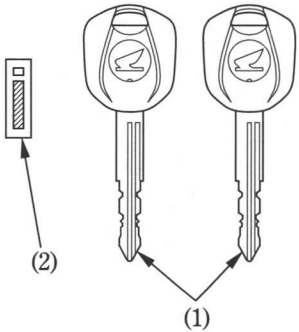

(1) Keys (2) Key number plate

You will need the key number if you ever have to replace a key. Store the plate in a safe place.

To reproduce keys, bring all keys, key number plate and motorcycle to your Honda dealer.

Up to four keys can be registered with the immobilizer system (HISS), including the ones in hand.

If all keys are lost, the PGM-FI unit/ignition control module must be replaced. To avoid this possibility we recommend that if only one key is left, you immediately have it reproduced to ensure that a back-up is available.

These keys contain electronic circuits that are activated by the immobilizer system (HISS). They will not work to start the engine if the circuits are damaged.

- Do not drop the keys or set heavy objects on them.
- Do not grind, drill or in any way alter the original shape of the keys.
- Keep the keys away from magnetic objects.

IMMOBILIZER SYSTEM (HISS)

HISS is the abbreviation of Honda Ignition Security System.

The immobilizer system (HISS) protects your motorcycle from theft. A properly-coded key must be used in the ignition switch for the engine to start. If an improperly-coded key (or other device) is used the engine's starting circuit is disabled.

When the ignition switch is turned ON and the engine stop switch is at " ○ " (RUN), the immobilizer system (HISS) indicator lights for a few seconds, then goes off. If the indicator remains on, it means the system does not recognize the coding of the key. Turn the ignition switch to OFF, remove the key, reinsert and turn the switch ON again.

The immobilizer system has such a function that keeps the immobilizer system (HISS) indicator (1) blinking at 2 second intervals for 24 hours. This blinking function can be turned on or off.

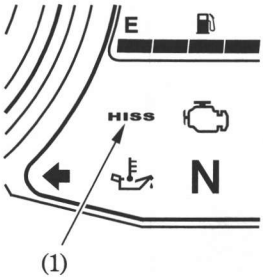

(1) Immobilizer system (HISS) indicator

To alter the blinking function:

1. Turn the ignition switch ON.
2. Press and hold the left control button (2) for more than 2 seconds when the display function mode is odometer.
3. The immobilizer system (HISS) indicator instantly flash, the function is enabled.
4. Turn the ignition switch OFF.

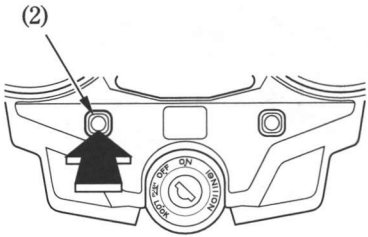

(2) Left control button

If the system repeatedly does not recognize the coding of your key, contact your Honda dealer.

- The system may not recognize the key's coding if any other immobilizer key is near the ignition switch. To make sure the system recognizes the key code, keep each immobilizer key on a separate ring.
- Do not attempt to alter the immobilizer system (HISS) or add other devices to it. Electrical problems could result, making it impossible to start your motorcycle.
- If all keys are lost, the PGM-FI unit/ ignition control module must be replaced.

EC Directives

This immobilizer system complies with the R & TTE (Radio equipment and telecommunications terminal equipment and the mutual recognition of their conformity) Directive.

CE

The declaration of conformity to R & TTE Directive is provided to the owner at the time of purchase. The declaration of conformity should be kept at a safe place. When the declaration of conformity is lost or is not provided, contact your Honda dealer.

RIGHT HANDLEBAR CONTROLS

Engine Stop Switch

The engine stop switch (1) is next to the throttle grip. When the switch is in the ○ (RUN) position, the engine will operate. When the switch is in the ⊗ (OFF) position, the engine will not operate. This switch is intended primarily as a safety or emergency switch and should normally remain in the ○ (RUN) position.

If your motorcycle is stopped with the ignition switch ON and the engine stop switch ⊗ (OFF), the headlight and taillight will still be on, resulting in battery discharge.

Start Button

The start button (2) is below the engine stop switch (1).

The start button is used for starting the engine. Pushing the button in starts the engine. See Starting Procedure, page 66 .

When the start button is pushed, the starter motor will crank the engine, the headlight will automatically go out, but the taillight will stay on.

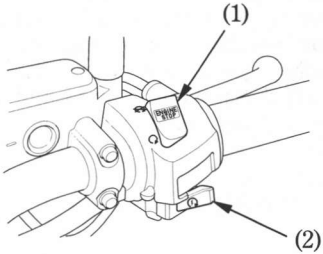

(1) Engine stop switch
(2) Start button

LEFT HANDLEBAR CONTROLS

Headlight Dimmer Switch (1)

Push the headlight dimmer switch to ≡D (HI) to select high beam or to ≡D (LO) to select low beam.

Passing Light Control Switch (2)

When this switch is pressed, the headlight flashes on to signal approaching cars or when passing.

Turn Signal Switch (3)

Move to ⇦ (L) to signal a left turn, ⇨ (R) to signal a right turn. Press to turn signal off.

Horn Button (4)

Press the button to sound the horn.

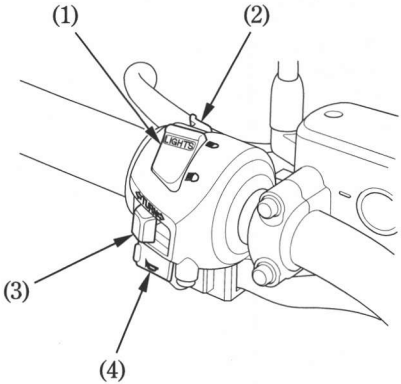

(1) Headlight dimmer switch
(2) Passing light control switch
(3) Turn signal switch
(4) Horn button

FEATURES
(Not required for operation)

STEERING LOCK

To lock the steering, turn the handlebar all the way to the left, turn the ignition key (1) to LOCK while pushing in. Remove the key. To unlock the steering, turn the key to OFF while pushing in.

Do not turn the key to LOCK while riding the motorcycle; loss of vehicle control will result.

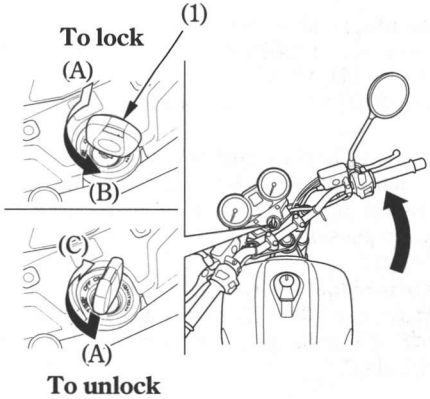

(1) Ignition key

(A) Push in
(B) Turn to LOCK
(C) Turn to OFF

SEAT

To remove the seat (1), insert the ignition key into the helmet holder (2) and turn it clockwise. Pull the seat unlock lever (3) downward to unlock the seat. Pull the seat back and up.

To install the seat, insert the front prong (4) into the front stay (5) and the rear prongs (6) into the rear stays (7) on the frame. Push forward and then down on the rear of the seat.

Be sure the seat is locked securely in position after installation.

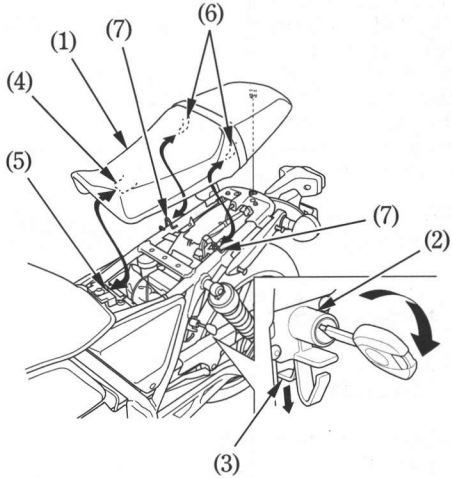

(1) Seat
(2) Helmet holder
(3) Seat unlock lever
(4) Front prong
(5) Front stay
(6) Rear prongs
(7) Rear stays

HELMET HOLDER

The helmet holder (1) is on the left side below the seat.

Insert the ignition key (2) and turn it clockwise to unlock. Hang your helmet on the holder hook (3). Turn the key counterclockwise to lock the holder hook and then remove the key.

⚠ WARNING

Riding with a helmet attached to the holder can interfere with the rear wheel or suspension and could cause a crash in which you can be seriously hurt or killed.

Use the helmet holder only while parked. Do not ride with a helmet secured by the holder.

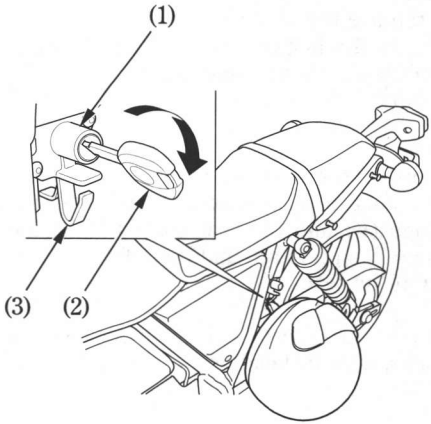

(1) Helmet holder
(2) Ignition key
(3) Holder hook

Another helmet holder is located on the right side under the seat. The helmet holder is designed to secure your helmet or passenger's helmet while parked.

Remove the seat (page 53). Hang the helmet on the holder hook (4). Install the seat and lock it securely.

⚠ WARNING

Riding with a helmet attached to the holder can interfere with the rear wheel or suspension and could cause a crash in which you can be seriously hurt or killed.

Use the helmet holder only while parked. Do not ride with a helmet secured by the holder.

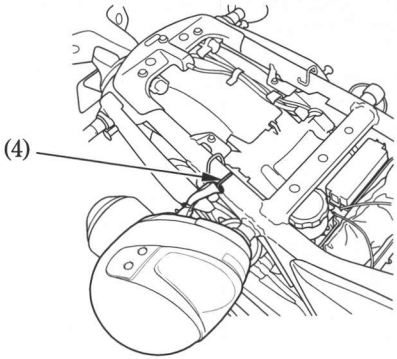

(4) Holder hook

DOCUMENT BAG

The document bag (1) is stored on the under side of the seat (page 53).
This owner's manual and other documents should be stored in the document bag.

When washing your motorcycle, be careful not to flood this area with water.

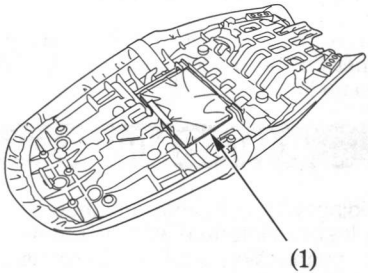

(1) Document bag

CENTER COMPARTMENT

The center compartment (1) is below the seat (page 53).

This compartment is for light weight items.

Cargo in the storage compartment should not exceed:

3.0 kg (6.6 lb)

Never exceed the maximum weight limit; handling and stability may be severely affected.

The center compartment may become heated by the engine. Do not store food and other articles which are flammable or susceptible to heat damage in this compartment.

Do not direct water under pressure against the center compartment as water will be forced into the compartment.

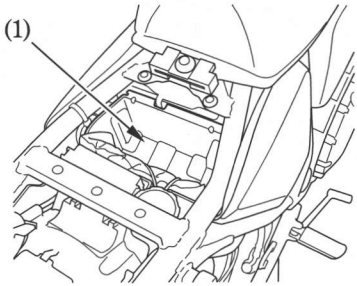

(1) Center compartment

STORAGE COMPARTMENT FOR U-SHAPED ANTI-THEFT LOCK

The rear fender has a storage compartment to store a U-shaped anti-theft lock under the seat (page 53). After storing, be sure to fasten the lock with the rubber band (1) securely.

Some U-shaped locks may not be stored in the compartment due to their size or design.

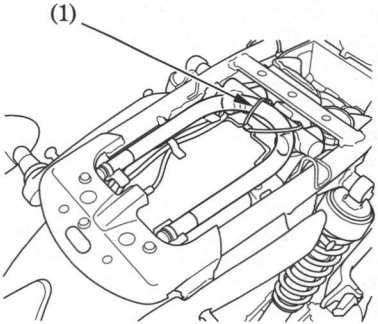

(1) Rubber band

SIDE COVERS

The right side cover must be removed for the air cleaner maintenance. The left side cover must be removed for fuse maintenance.

The right and left side covers can be removed in the same manner.

Removal:

1. Remove the bolt (1).
2. Remove the prongs (2) from the grommets (3).
3. Remove the side cover (4) (5).

Installation:

1. Position the cover so the prongs are aligned with the frame grommets.
2. Push the prongs in.
3. Install the bolt.

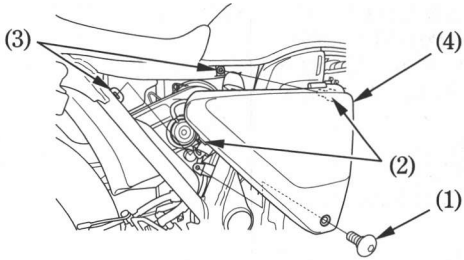

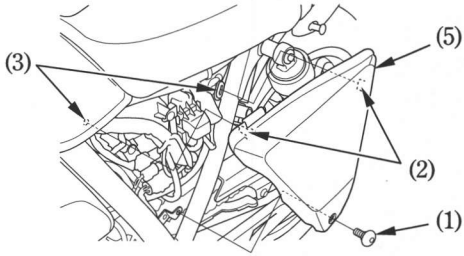

(1) Bolt
(2) Prongs
(3) Grommets
(4) Right side cover
(5) Left side cover

HEADLIGHT AIM VERTICAL ADJUSTMENT

Vertical adjustment can be made by moving the headlight case (1) as necessary.
To move the headlight case, loosen the bolts (2).
Tighten the bolts after adjustment.
Obey local laws and regulations.

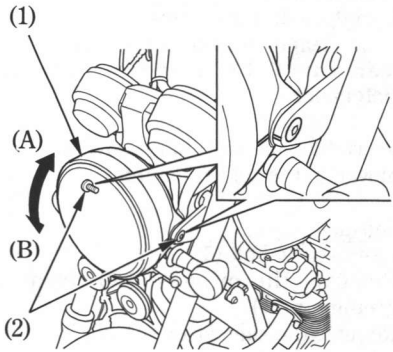

(1) Headlight case
(2) Bolts
(A) Up
(B) Down

CLIP

Removal:

1. Press down on the center pin to release the lock.
2. Pull out the clip from the hole.

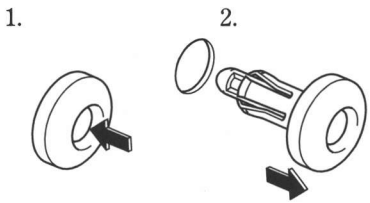

Installation:

1. Push the bottom of the pin.
2. Insert the clip into the hole.
3. Lightly press down on the center pin to lock the clip.

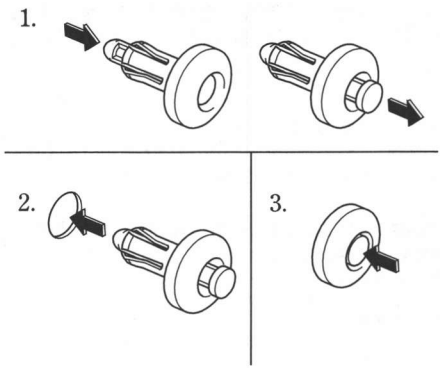

OPERATION

PRE-RIDE INSPECTION

For your safety, it is very important to take a few moments before each ride to walk around your motorcycle and check its condition. If you detect any problem, be sure you take care of it, or have it corrected by your Honda dealer.

⚠ WARNING

Improperly maintaining this motorcycle or failing to correct a problem before riding can cause a crash in which you can be seriously hurt or killed.

Always perform a pre-ride inspection before every ride and correct any problems.

1. Engine oil level—add engine oil if required (page 37). Check for leaks.
2. Fuel level—fill fuel tank when necessary (page 34). Check for leaks.
3. Front and rear brakes—check operation; make sure there is no brake fluid leakage (pages 29 — 31).

4. Tyres—check condition and pressure (pages 38 – 43).
5. Drive chain—check condition and slack (pages 97 – 98). Adjust and lubricate if necessary.
6. Throttle—check for smooth opening and full closing in all steering positions.
7. Lights and horn—check that headlight, brake/tail light, turn signals, indicators and horn function properly.
8. Engine stop switch—check for proper function (page 50).
9. Side stand ignition cut-off system—check for proper function (page 105).

STARTING THE ENGINE

Always follow the proper starting procedure described below.

This motorcycle is equipped with a side stand ignition cut-off system. The engine cannot be started if the side stand is down, unless the transmission is in neutral. If the side stand is up, the engine can be started in neutral or in gear with the clutch lever pulled in. After starting with the side stand down, the engine will shut off if the transmission is put in gear before raising the side stand.

To protect the catalytic converter in your motorcycle's exhaust system, avoid extending idling and the use of leaded petrol.

Your motorcycle's exhaust contains poisonous carbon monoxide gas. High levels of carbon monoxide can collect rapidly in enclosed areas such as a garage. Do not run the engine with the garage door closed. Even with the door open, run the engine only long enough to move your motorcycle out of the garage.

Do not use the electric starter for more than 5 seconds at a time. Release the start button for approximately 10 seconds before pressing it again.

Preparation

Before starting, insert the key, turn the ignition switch ON and confirm the following:

- The transmission is in neutral (neutral indicator is ON).
- The engine stop switch is at ○ (RUN).
- The low oil pressure indicator is ON.
- The PGM-FI malfunction indicator lamp (MIL) is OFF.
- The high oil temperature indicator is OFF.
- The immobilizer system (HISS) indicator is OFF.
- The ABS indicator is ON. (CB1100A)

The low oil pressure indicator should go off a few seconds after the engine starts. If the low oil pressure indicator lights during operation, stop the engine immediately and check the engine oil level.

〈CB1100A〉

The ABS indicator should go off after you ride the motorcycle at a speed above 10 km/h (6 mph).

NOTICE

Operating the engine with insufficient oil pressure can cause serious engine damage.

Starting Procedure

This motorcycle has a fuel-injected engine with an automatic choke. Follow the procedure indicated below.

Any Air Temperature:

1. With the throttle completely closed, press the start button.

The engine will not start if the throttle is fully open (because the electronic control module cuts off the fuel supply).

Snapping the throttle or fast idling for more than about 5 minutes at normal air temperature may cause exhaust pipe discoloration.

Flooded Engine

If the engine fails to start after repeated attempts, it may be flooded.

1. Leave the engine stop switch set to ○ (RUN).
2. Open throttle fully.
3. Press the start button for 5 seconds.
4. Follow the normal starting procedure.
   If the engine starts with unstable idle, open the throttle slightly.
   If the engine does not start, wait for 10 seconds, then follow steps 1 – 4 again.

Ignition Cut Off

Your motorcycle is designed to automatically stop the engine and fuel pump if the motorcycle is over-turned (a banking sensor cuts off the ignition system). Before restarting the engine, you must turn the ignition switch to the OFF position and then back to ON.

RUNNING-IN

Help assure your motorcycle's future reliability and performance by paying extra attention to how you ride during the first 500 km (300 miles).

During this period, avoid full-throttle starts and rapid acceleration.

RIDING

Review Motorcycle Safety (pages 1 – 7) before you ride.

Make sure you understand the function of the side stand mechanism. (See MAINTENANCE SCHEDULE on page 82 and explanation for SIDE STAND on page 105).

Make sure flammable materials such as dry grass or leaves do not come in contact with the exhaust system when riding, idling, or parking your motorcycle.

1. After the engine has been warmed up, the motorcycle is ready for riding.
2. While the engine is idling, pull in the clutch lever and depress the shift lever to shift into 1st (low) gear.
3. Slowly release the clutch lever and at the same time gradually increase engine speed by opening the throttle. Coordination of the throttle and clutch lever will assure a smooth positive start.
4. When the motorcycle attains a moderate speed, close the throttle, pull in the clutch lever and shift to 2nd gear by raising the shift lever.
   This sequence is repeated to progressively shift to 3rd, 4th and 5th (top) gears.

5. Coordinate the throttle and brakes for smooth deceleration.
6. Both front and rear brakes should be used at the same time and should not be applied strongly enough to lock the wheel, or braking effectiveness will be reduced and control of the motorcycle be difficult.

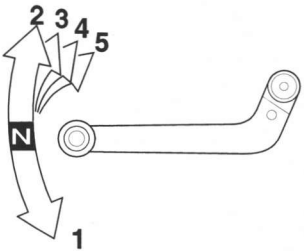

BRAKING

〈CB1100A〉

Your motorcycle is equipped with a Combined Brake System. Operating the front brake lever applies the front brake. Operating the rear brake pedal applies the rear brake and a portion of the front brake. For full braking effectiveness, use both the lever and pedal simultaneously, as you would with a conventional motorcycle braking system.

〈CB1100〉

Your motorcycle is equipped with disc braking systems which are hydraulically activated. Operating the brake lever applies the front disc brake. Depressing the brake pedal applies the rear disc brake.

For normal braking, apply both the brake pedal and lever while down-shifting to match your road speed. For maximum braking, close the throttle and firmly apply the pedal and lever; pull in the clutch lever before coming to a complete stop to prevent stalling the engine.

Important Safety Reminders:

- Independent operation of only the brake lever or brake pedal reduces stopping performance.
- Extreme application of the brake controls may cause wheel lock, reducing control of the motorcycle.
- When possible, reduce speed or brake before entering a turn; closing the throttle or braking in mid-turn may cause wheel slip. Wheel slip will reduce control of the motorcycle.

- When riding in wet or rainy conditions, or on loose surfaces, the ability to maneuver and stop will be reduced. All of your actions should be smooth under these conditions. Rapid acceleration, braking or turning may cause loss of control. For your safety, exercise extreme caution when braking, accelerating or turning.
- When descending a long, steep grade, use engine compression braking by downshifting, with intermittent use of both brakes.
  Continuous brake application can overheat the brakes and reduce their effectiveness.
- Riding with your foot resting on the brake pedal or your hand on the brake lever may actuate the brakelight, giving a false indication to other drivers. It may also overheat the brakes, reducing effectiveness.

Anti-lock Brake System (ABS) 〈CB1100A〉

This model is also equipped with an Anti-lock Brake System (ABS) designed to help prevent wheel lock up during hard braking on uneven or other poor surfaces while running straight. Although the wheel may not lock up—if you are braking too hard in a turn the motorcycle can still lose traction, causing a loss of control.

In some situations, a motorcycle with ABS may require a longer stopping distance to stop on loose or uneven surfaces than an equivalent motorcycle without ABS.

ABS cannot make up for road conditions, bad judgment, or improper operation of the brakes. It is still your responsibility to ride at reasonable speeds for weather, road surface, and traffic conditions, and to leave a margin of safety.

ABS is self-checking and always on.

- ABS may be activated by riding over a sharp drop or rise in the road level.
  It is important to follow the tyre recommendations (page 38). The ABS computer works by comparing wheel speed. Non-recommended tyres can affect wheel speed and may confuse the ABS computer.
- ABS does not function at low speeds (approximately 10 km/h (6 mph) or below).
- ABS does not function if the battery is discharged.

ABS Indicator
〈CB1100A〉

Normally, Anti-lock Brake System (ABS) indicator comes on when the ignition is turned ON, and goes off after you ride the motorcycle at speed above 10 km/h (6 mph). If there is an ABS problem, the indicator lights or flashes and remains on. The ABS system does not operate when the ABS indicator is on.

If the ABS indicator comes on while riding, stop the motorcycle in a safe place and turn off the engine.
Turn the ignition ON again. The indicator should come on, and go off after you ride the motorcycle at speeds above 10 km/h (6 mph). If it does not go off, ABS is not functioning, but the brakes still work provide normal stopping ability. However, you should have the system checked by Honda dealer as soon as possible.

The ABS indicator may flash if you turn the rear wheel while the motorcycle is upright on the stand. This is normal. Turn the ignition OFF, then turn it ON. The indicator should come on, then go off after you run the motorcycle above 30 km/h (19 mph).

PARKING

1. After stopping the motorcycle, shift the transmission into neutral, turn the handlebar fully to the left, turn the ignition switch OFF and remove the key.
2. Use the side or center stand to support the motorcycle while parked.

Park the motorcycle on firm, level ground to prevent it from falling over.
If you must park on a slight incline, aim the front of the motorcycle uphill to reduce the possibility of overturning or rolling off the center or side stand.

3. Lock the steering to help prevent theft (page 52).

Make sure flammable materials such as dry grass or leaves do not come in contact with the exhaust system when parking your motorcycle.

To avoid possible heat damage to your motorcycle or personal belongings, do not cover the exhaust muffler with a protective cover or any clothing within 20 minutes after shutting off the engine.

ANTI-THEFT TIPS

1. Always lock the steering and never leave the key in the ignition switch. This sounds simple but people do forget.
2. Be sure the registration information for your motorcycle is accurate and current.
3. Park your motorcycle in a locked garage whenever possible.
4. Use an additional anti-theft device of good quality.
5. Put your name, address, and phone number in this Owner's Manual and keep it on your motorcycles at all times.
   Many times stolen motorcycles are identified by information in the Owner's Manuals that are still with them.

NAME:_____

ADDRESS:_____

_____

_____

PHONE NO:_____

MAINTENANCE

THE IMPORTANCE OF MAINTENANCE

A well-maintained motorcycle is essential for safe, economical and trouble-free riding. It will also help reduce air pollution.

To help you properly care for your motorcycle, the following pages include a Maintenance Schedule and a Maintenance Record for regularly scheduled maintenance.

These instructions are based on the assumption that the motorcycle will be used exclusively for its designed purpose. Sustained high speed operation or operation in unusually wet or dusty conditions will require more frequent service than specified in the Maintenance Schedule. Consult your Honda dealer for recommendations applicable to your individual needs and use.

If your motorcycle overturns or becomes involved in a crash, be sure your Honda dealer inspects all major parts, even if you are able to make some repairs.

⚠ WARNING

Improperly maintaining this motorcycle or failing to correct a problem before you ride can cause a crash in which you can be seriously hurt or killed.

Always follow the inspection and maintenance recommendations and schedules in this owner's manual.

MAINTENANCE SAFETY

This section includes instructions on some important maintenance tasks. You can perform some of these tasks with the tools provided — if you have basic mechanical skills.

Other tasks that are more difficult and require special tools are best performed by professionals. Wheel removal should normally be handled only by a Honda technician or other qualified mechanic; instructions are included in this manual only to assist in emergency service.

Some of the most important safety precautions follow. However, we cannot warn you of every conceivable hazard that can arise in performing maintenance. Only you can decide whether or not you should perform a given task.

⚠ WARNING

Failure to properly follow maintenance instructions and precautions can cause you to be seriously hurt or killed.

Always follow the procedures and precautions in this owner's manual.

SAFETY PRECAUTIONS

- Make sure the engine is off before you begin any maintenance or repairs. This will help eliminate several potential hazards:
  - **Carbon monoxide poisoning from engine exhaust.**
    Be sure there is adequate ventilation whenever you operate the engine.
  - **Burns from hot parts.**
    Let the engine and exhaust system cool before touching.
  - **Injury from moving parts.**
    Do not run the engine unless instructed to do so.
- Read the instructions before you begin, and make sure you have the tools and skills required.
- To help prevent the motorcycle from falling over, park it on a firm, level surface, using the center stand or a maintenance stand to provide support.
- To reduce the possibility of a fire or explosion, be careful when working around petrol or batteries. Use only nonflammable solvent, not petrol, to clean parts. Keep cigarettes, sparks and flames away from the battery and all fuel-related parts.

Remember that your Honda dealer knows your motorcycle best and is fully equipped to maintain and repair it.

To ensure the best quality and reliability, use only new Honda Genuine Parts or their equivalents for repair and replacement.

MAINTENANCE SCHEDULE

Perform the Pre-ride Inspection (page 62) at each scheduled maintenance period.
I: INSPECT AND CLEAN, ADJUST, LUBRICATE OR REPLACE IF NECESSARY
C: CLEAN R: REPLACE A: ADJUST L: LUBRICATE
The following items require some mechanical knowledge. Certain items (particularly those marked * and * *) may require more technical information and tools. Consult your Honda dealer.

* Should be serviced by your Honda dealer, unless the owner has proper tools and service data and is mechanically qualified. Refer to the Official Honda Shop Manual.
** In the interest of safety, we recommend these items be serviced only by your Honda dealer.

Honda recommends that your Honda dealer should road test your motorcycle after each periodic maintenance is carried out.

NOTES: (1) At higher odometer readings, repeat at the frequency interval established here.
(2) Service more frequently when riding in unusually wet or dusty areas.
(3) Service more frequently when riding in rain or at full throttle.
(4) Replace every 2 years, or at indicated odometer interval, whichever comes first. Replacement requires mechanical skill.

FREQUENCY / ITEM	WHICHEVER → COMES FIRST ↓ NOTE	× 1,000 km	1	6	12	18	24	30	36	Refer to Page
		× 1,000 mi	0.6	4	8	12	16	20	24	
		MONTH		6	12	18	24	30	36	
			ODOMETER READING [NOTE (1)]							
* FUEL LINE					I		I		I	—
* THROTTLE OPERATION					I		I		I	94
AIR CLEANER	NOTE (2)					I			I	95
CRANKCASE BREATHERS	NOTE (3)			C	C	C	C	C	C	91
SPARK PLUGS					I		R		I	92
* VALVE CLEARANCE					I		I		I	—
ENGINE OIL			R	R	R	R	R	R	R	86
ENGINE OIL FILTER			R		R		R		R	88
* ENGINE IDLE SPEED			I		I		I		I	—
* SECONDARY AIR SUPPLY SYSTEM					I		I		I	—

FREQUENCY / ITEM	WHICHEVER → COMES FIRST ↓ NOTE	× 1,000 km	1	6	12	18	24	30	36	Refer to Page
		× 1,000 mi	0.6	4	8	12	16	20	24	
		MONTH		6	12	18	24	30	36	
			ODOMETER READING [NOTE (1)]							
DRIVE CHAIN			EVERY 1,000 km (600 mi) I, L							97
DRIVE CHAIN SLIDER					I		I		I	103
BRAKE FLUID	NOTE (4)			I	I	R	I	I	R	29
BRAKE PADS WEAR				I	I	I	I	I	I	112
BRAKE SYSTEM			I		I		I		I	29
* BRAKELIGHT SWITCH					I		I		I	120
* HEADLIGHT AIM					I		I		I	60
CLUTCH SYSTEM					I		I		I	32
CLUTCH FLUID	NOTE (4)			I	I	R	I	I	R	32
** EXHAUST GAS CONTROL VALVE CABLE			EVERY 24,000 km (16,000 mi) I							—
SIDE STAND					I		I		I	105
* SUSPENSION					I		I		I	104
* NUTS, BOLTS, FASTENERS			I		I		I		I	—
** WHEELS/TYRES					I		I		I	—
** STEERING HEAD BEARINGS			I		I		I		I	—

TOOL KIT

The tool kit (1) is in the center compartment (2) under the seat (page 53). Some roadside repairs, minor adjustments and parts replacement can be performed with the tools contained in the kit.

- Spark plug wrench
- 8 × 12 mm Open end wrench
- 10 × 14 mm Open end wrench
- 14 × 17 mm Open end wrench
- 27 mm Box end wrench
- 32 mm Box end wrench
- Screwdriver handle
- Extension bar
- Pin spanner
- 5 mm Hex wrench
- No. 2 Phillips screwdriver
- No. 2 screwdriver
- Fuse remover
- Tool bag

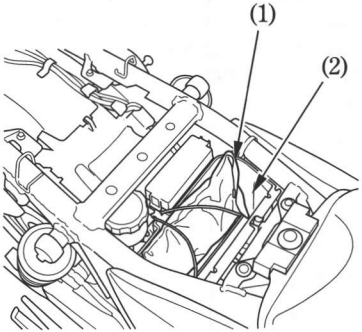

(1) Tool kit
(2) Center compartment

SERIAL NUMBERS

The frame and engine serial numbers are required when registering your motorcycle. They may also be required by your dealer when ordering replacement parts.
Record the numbers here for your reference.

FRAME NO._____

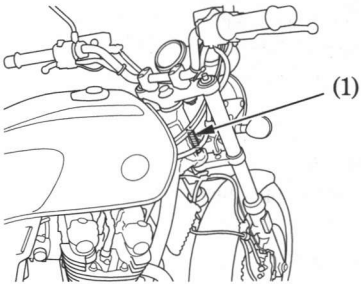

(1) Frame number

The frame number (1) is stamped on the right side of the steering head.

The engine number (2) is stamped on top of the crankcase.

ENGINE NO._____

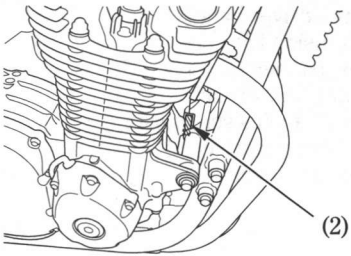

(2) Engine number

COLOUR LABEL

The colour label (1) is attached to the frame below the seat (page 53).
It is helpful when ordering replacement parts. Record the colour and code here for your reference.

COLOUR _____

CODE _____

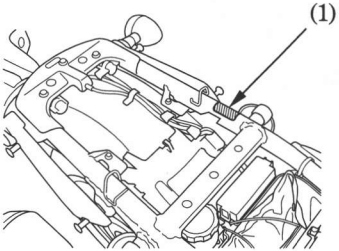

(1) Colour label

ENGINE OIL

Refer to the Safety Precautions on page 79 .

Oil Recommendation

API classification	SG or higher except oils labeled as energy conserving on the circular API service label
Viscosity	SAE 10W-30
JASO T 903 standard	MA

Suggested Oil
Honda "4-STROKE MOTORCYCLE OIL" or equivalent.

Your motorcycle does not need oil additives. Use the recommended oil.

Do not use oils with graphite or molybdenum additives. They may adversely affect clutch operation.

Do not use API SH or higher oils displaying a circular API "energy conserving" service label on the container. They may affect lubrication and clutch performance.

NOT RECOMMENDED

OK

Do not use non-detergent, vegetable, or castor based racing oils.

Viscosity:
Viscosity grade of engine oil should be based on average atmospheric temperature in your riding area. The following provides a guide to the selection of the proper grade or viscosity of oil to be used at various atmospheric temperatures.

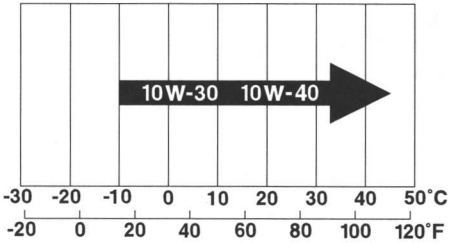

JASO T 903 standard
The JASO T 903 standard is an index for engine oils for 4-stroke motorcycle engines. There are two classes: MA and MB.
Oil conforming to the standard is labeled on the oil container. For example, the following label shows the MA classification.

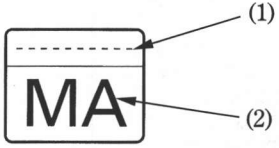

PRODUCT MEETING JASO T 903
COMPANY GUARANTEEING THIS MA PERFORMANCE:

(1) Code number of the sales company of the oil
(2) Oil classification

Engine Oil and Filter

Engine oil quality is the chief factor affecting engine service life. Change the engine oil as specified in the maintenance schedule (page 81).
When running in very dusty conditions, oil changes should be performed more frequently than specified in the maintenance schedule.

Please dispose of used engine oil in a manner that is compatible with the environment. We suggest you take it in a sealed container to your local recycling center or service station for reclamation. Do not throw it in the trash or pour it on the ground or down a drain.

Used engine oil may cause skin cancer if repeatedly left in contact with the skin for prolonged periods. Although this is unlikely unless you handle used oil on a daily basis, it is still advisable to thoroughly wash your hands with soap and water as soon as possible after handling used oil.

Changing the oil filter requires a special oil filter tool and a torque wrench. If you do not have these tools and the necessary skill, we recommend that you have your Honda dealer perform this service.

If a torque wrench is not used for this installation, see your Honda dealer as soon as possible to verify proper assembly.

Change the engine oil with the engine at normal operating temperature and the motorcycle on its center stand to assure complete and rapid draining.

1. Place a drain pan under the crankcase.
2. To drain the oil, remove the oil fill cap, oil drain bolt (1) and sealing washer (2).

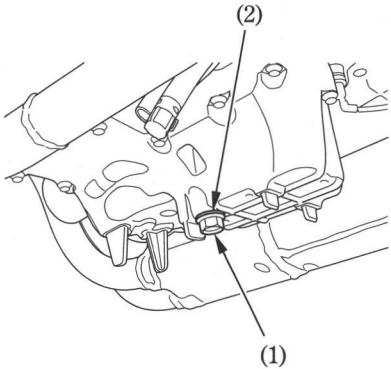

3. Remove the oil filter (3) with a filter wrench and let the remaining oil drain out. Discard the oil filter.

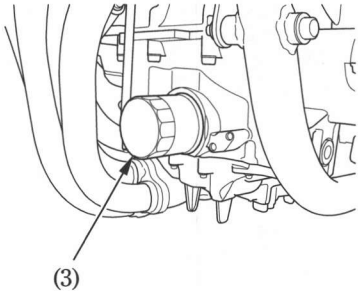

(1) Oil drain bolt (2) Sealing washer (3) Oil filter

4. Apply a thin coat of engine oil to the new oil filter rubber seal (4).
5. Using a special tool and a torque wrench, install the new oil filter and tighten to a torque of:
   26 N·m (2.7 kgf·m , 20 lbf·ft)

Use only the Honda Genuine oil filter or a filter of equivalent quality specified for your model. Using the wrong Honda filter or a non-Honda filter which is not of equivalent quality may cause engine damage.

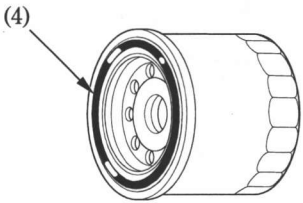

(4) Oil filter rubber seal

6. Replace the sealing washer every time the oil is changed and install the bolt.
   Engine oil drain bolt torque:
   30 N·m (3.1 kgf·m , 22 lbf·ft)
7. Fill the crankcase with the recommended grade oil; approximately:
   3.9 ℓ (4.1 US qt , 3.4 Imp qt)
8. Install the oil fill cap.
9. Start the engine and let it idle for 3–5 minutes.
10. 2–3 minutes after stopping the engine, check that the oil level is at the upper level mark in the inspection window with the motorcycle on its center stand, level ground. Make sure there are no oil leaks.

CRANKCASE BREATHERS

Refer to the Safety Precautions on page 79 .

1. Remove the crankcase breather tube plug (1) from the tube and drain deposits into a suitable container.
2. Reinstall the crankcase breather tube plug.

Service more frequently when riding in rain, at full throttle, or after the motorcycle is washed or overturned. Service if the deposit level can be seen in the transparent section of the drain plug.

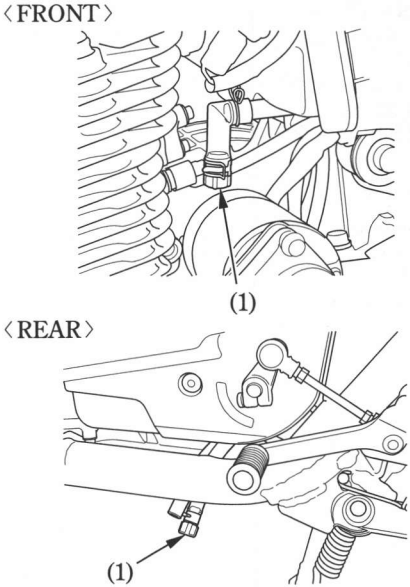

(1) Crankcase breather tube plug

SPARK PLUGS

Refer to the Safety Precautions on page 79 .

Recommended plug:
Standard:
LMAR8A-9S (NGK)

NOTICE

Never use a spark plug with an improper heat range. Severe engine damage could result.

1. Disconnect the spark plug caps (1) from the spark plugs.
2. Clean any dirt from around the spark plug bases.
   Remove the spark plugs using a spark plug wrench (2) furnished in the tool kit (page 83).

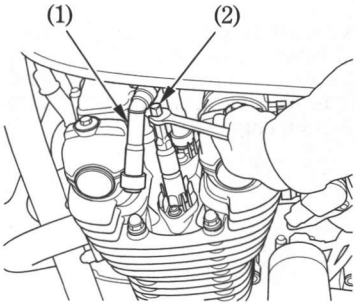

(1) Spark plug cap
(2) Spark plug wrench

3. Inspect the electrodes and center porcelain for deposits, erosion or carbon fouling. If the erosion or deposit is heavy, replace the plug. Clean a carbon or wet-fouled plug with a plug cleaner, otherwise use a wire brush.
4. Check the spark plug gap (3) using a wire-type feeler gauge. If adjustment is necessary, bend the side electrode (4) carefully.
   The gap should be:
   0.8 – 0.9 mm (0.03 – 0.04 in)

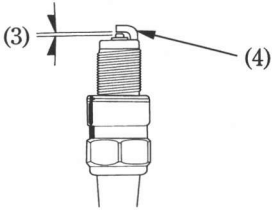

(3) Spark plug gap
(4) Side electrode

5. Make sure the plug washer is in good condition.
6. With the plug washer attached, thread the spark plug in by hand to prevent cross-threading.
7. Tighten each spark plug:
   - If the old plug is good:
     1/5 turn after it seats.
   - If installing a new plug, tighten it twice to prevent loosening:
     a) First, tighten the plug:
     NGK: 1/4 turn after it seats.
     b) Then loosen the plug.
     c) Next, tighten the plug again:
     1/5 turn after it seats.

NOTICE

Improperly tightened spark plugs can damage the engine. If a plug is too loose, a piston may be damaged. If a plug is too tight, the threads may be damaged.

8. Reinstall the spark plug caps. Take care to avoid pinching any cables or wires.

THROTTLE OPERATION

Refer to the Safety Precautions on page 79 .

1. Check for smooth rotation of the throttle grip from the fully open to the fully closed position at both full steering positions.
2. Measure the throttle grip freeplay at the throttle grip flange.
   The standard freeplay should be approximately:
   2 – 6 mm (0.1 – 0.2 in)

To adjust the freeplay, loosen the lock nut (1) and turn the adjuster (2).

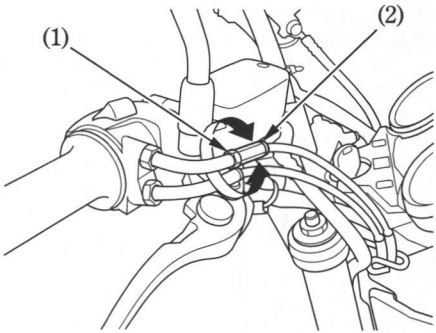

(1) Lock nut (2) Adjuster

AIR CLEANER

Refer to the Safety Precautions on page 79 .

The air cleaner should be serviced at regular intervals (page 81). Service more frequently when riding in unusually wet or dusty areas.

1. Remove the right side cover (page 59).
2. Remove the attaching screws (1) and air cleaner housing cover (2).

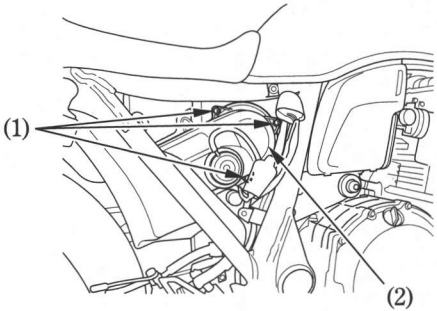

(1) Attaching screws
(2) Air cleaner housing cover

3. Pull out the air cleaner (3) and check it for any damage.
   Blow away the remaining dust by applying compressed air from the outside of the air cleaner.
   Replace the air cleaner if it is excessively dirty, torn or damage.
4. Thoroughly clean the inside of the air cleaner housing (4).
5. Install the air cleaner.
   In case of replacement need, use the Honda genuine air cleaner or an equivalent air cleaner specified for your model. Using the wrong Honda air cleaner or a non-Honda air cleaner which is not of equivalent quality may cause premature engine wear or performance problems.
6. Install the removed parts in reverse order of removal.

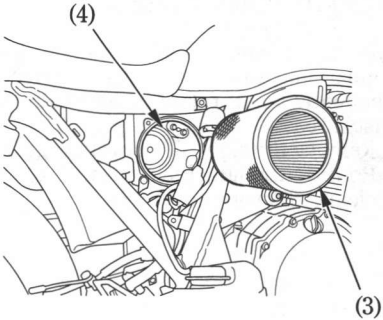

(3) Air cleaner
(4) Air cleaner housing

DRIVE CHAIN

Refer to the Safety Precautions on page 79 .

The service life of the drive chain (1) is dependent upon proper lubrication and adjustment. Poor maintenance can cause premature wear or damage to the drive chain and sprockets.
The drive chain should be checked, adjusted and lubricated as part of the Pre-ride Inspection (page 62). Under severe usage, or when the motorcycle is ridden in unusually dusty or muddy areas, more frequent maintenance will be necessary.

Inspection:

1. Turn the engine off, place the motorcycle on its center stand, and shift the transmission into neutral.
2. Check slack in the lower drive chain run midway between the sprockets.
   Drive chain slack should be adjusted to allow the following vertical movement by hand:
   25 – 35 mm (1.0 – 1.4 in)
3. Rotate the rear wheel. Stop. Check the drive chain slack. Repeat this procedure several times. Drive chain slack should remain constant. If the chain is slack only in certain sections, some links are kinked and binding. Binding and kinking can frequently be eliminated by lubrication.

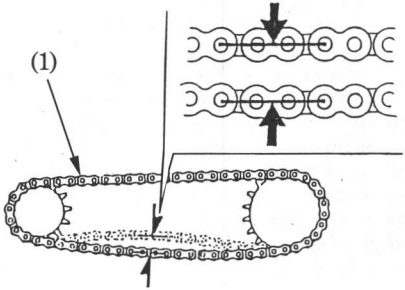

(1) Drive chain

4. Rotate the rear wheel slowly and inspect the drive chain and sprockets for any of the following conditions:

DRIVE CHAIN

*Damaged Rollers
*Loose Pins
*Dry or Rusted Links
*Kinked or Binding Links
*Excessive Wear
*Improper Adjustment
*Damaged or Missing O-rings

SPROCKETS

*Excessively Worn Teeth
*Broken or Damaged Teeth

A drive chain with damaged rollers, loose pins, or missing O-rings must be replaced. A chain which appears dry, or shows signs of rust, requires supplementary lubrication. Kinked or binding links should be thoroughly lubricated and worked free. If links cannot be freed, the chain must be replaced.

Damaged Sprocket Teeth

REPLACE

Worn Sprocket Teeth

REPLACE

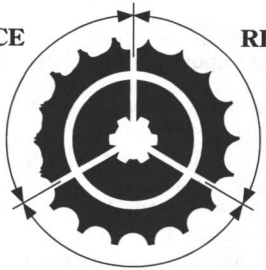

Normal Sprocket Teeth

GOOD

Adjustment:
Drive chain slack should be checked and adjusted, if necessary, every 1,000 km (600 miles). When operated at sustained high speeds or under conditions of frequent rapid acceleration, the chain may require more frequent adjustment.

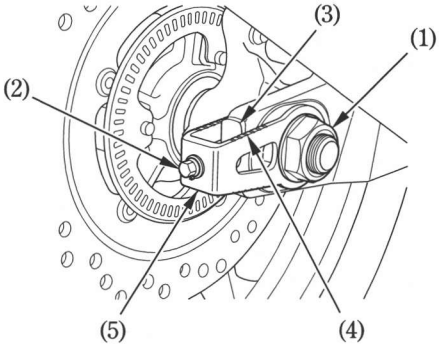

(1) Rear axle nut
(2) Adjusting bolt
(3) Rear end of the swingarm
(4) Corresponding scale
(5) Adjuster

If the drive chain requires adjustment, the procedure is as follows:

1. Place the motorcycle on its center stand with the transmission in neutral and the ignition switch OFF.
2. Loosen the rear axle nut (1).
3. Turn both adjusting bolts (2) an equal number of turns until the correct drive chain slack is obtained. Turn the adjusting bolts counterclockwise to tighten the chain, or clockwise to provide more slack. Adjust the chain slack at a point midway between the drive sprocket and the rear wheel sprocket. Rotate the rear wheel and recheck slack at other sections of the chain.
   Chain slack should be:
   25 – 35 mm (1.0 – 1.4 in)

4. Check the rear axle alignment by making sure the rear end of the swingarm (3) aligns with the corresponding scale (4) on the adjuster (5).
   Both left and right swingarm ends should align with the same mark on the corresponding scale. If the axle is misaligned, turn the left or right adjusting bolt until the marks correspond.
5. Tighten the rear axle nut to the specified torque:
   113 N·m (11.5 kgf·m , 83 lbf·ft)

If a torque wrench is not used for this installation, see your Honda dealer as soon as possible to verify proper assembly.

6. Tighten the adjusting bolts lightly.
7. Recheck drive chain slack.

Wear Inspection:
Check the chain wear label when adjusting the chain. If the red zone (6) on the label aligns with the rear end of the swingarm (7) after the chain has been adjusted to the proper slack, the chain is excessively worn and must be replaced. The proper slack is:

25 – 35 mm (1.0 – 1.4 in)

Damage to the bottom part of the frame may be caused by excessive drive chain slack of more than:

50 mm (2.0 in)

Replacement chain:

DIDH50ZVM2

This motorcycle has a staked master link drive chain which requires a special tool for cutting and staking. Do not use an ordinary master link with this chain. See your Honda dealer.

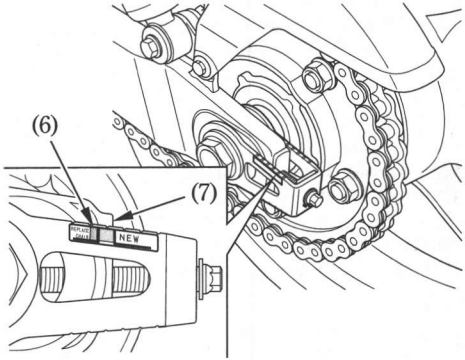

(6) Red zone
(7) Rear end of the swingarm

Lubrication and Cleaning:

Lubricate every 1,000 km (600 miles) or sooner if chain appears dry.

The drive chain on this motorcycle is equipped with small O-rings between the link plates. These O-rings retain grease inside the chain to improve its service life. The O-rings in this chain can be damaged by steam cleaning, high pressure washers, and certain solvents. Clean the side surfaces of the chain with a dry cloth. Do not brush the rubber O-rings. Brushing will damage them. Wipe dry and lubricate only with SAE 80 or 90 gear oil. Commercial chain lubricants may contain solvents which could damage the rubber O-rings.

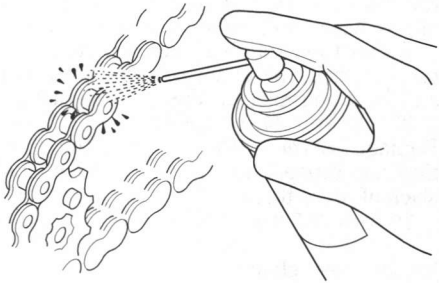

DRIVE CHAIN SLIDER

Refer to the Safety Precautions on page 79 .

Check the chain slider (1) for wear.
The chain slider must be replaced if it is worn to the wear limit line (2). For replacement, see your Honda dealer.

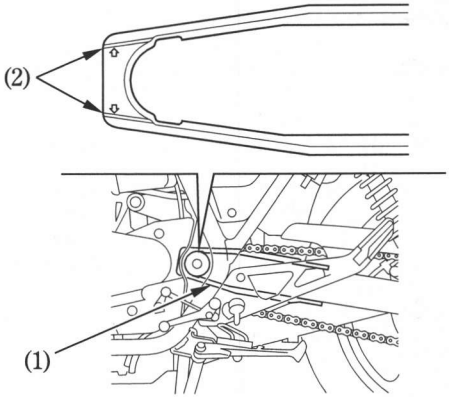

(1) Chain slider (2) Wear limit line

FRONT AND REAR SUSPENSION INSPECTION

Refer to the Safety Precautions on page 79 .

1. Check the front fork assembly by locking the front brake and pumping the fork up and down vigorously. Suspension action should be smooth and there must be no oil leakage.
2. Swingarm bearings should be checked by pushing hard against the side of the rear wheel while the motorcycle is on the center stand. Freeplay indicates worn bearings.
3. Carefully inspect all front and rear suspension fasteners for tightness.

SIDE STAND

Refer to the Safety Precautions on page 79 .

Perform the following maintenance in accordance with the maintenance schedule.

Functional Check:

- Check the side stand spring (1) for damage or loss of tension and the side stand assembly for freedom of movement.
- Check the side stand ignition cut-off system:
  1. Sit astride the motorcycle; put the side stand up and the transmission in neutral.
  2. Start the engine and with the clutch lever pulled in, shift the transmission into gear.
  3. Lower the side stand. The engine should stop as you put the side stand down.

If the side stand system does not operate as described, see your Honda dealer for service.

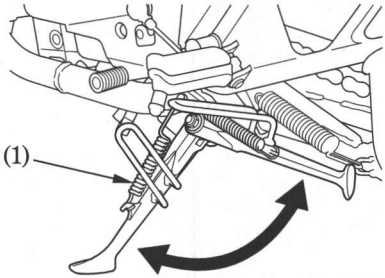

(1) Side stand spring

WHEEL REMOVAL

Refer to the Safety Precautions on page 79 .

When removing and installing the wheel, be careful not to damage the sensor and pulser ring (Model equipped with ABS).

Front Wheel Removal

1. Place the motorcycle on its center stand.
2. Raise the front wheel off the ground by placing a support block under the engine.
3. Cover both sides of the front wheel with a protective tape (1) or equivalent.
4. Remove the right and left caliper assemblies (2) from the fork leg by removing the fixing bolts (3).

To avoid damage to the brake hose, support the caliper assembly so that it doesn't hang from the hose. Do not twist the brake hose.

Avoid getting grease, oil, or dirt on the disc or pad surfaces. Any contamination can cause poor brake performance or rapid pad wear after reassembly.

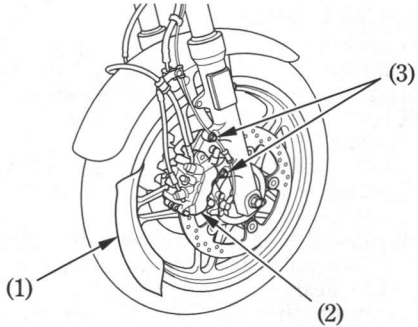

(1) Protective tape
(2) Caliper assembly
(3) Fixing bolts

〈**CB1100A**〉
Do not depress the brake lever and brake pedal when the caliper assembly is removed. The caliper pistons will be forced out of the cylinders with subsequent loss of brake fluid. If this occurs, servicing of the brake system will be necessary. See your Honda dealer for this service.

〈**CB1100**〉
Do not depress the brake lever when the caliper assembly is removed. The caliper pistons will be forced out of the cylinders with subsequent loss of brake fluid. If this occurs, servicing of the brake system will be necessary. See your Honda dealer for this service.

5. Remove the axle bolt (4), and then loosen the right and left axle pinch bolts (5).
6. Remove the front axle shaft (6), front wheel and side collars.

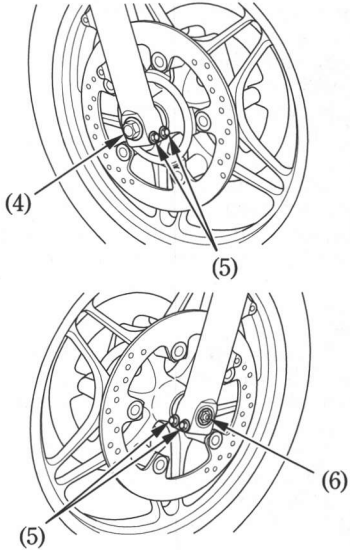

(4) Axle bolt
(5) Axle pinch bolts
(6) Front axle shaft

Front Wheel Installation

1. Install the side collars into the left and right side wheel hub.
2. Position the front wheel between the fork legs and insert the front axle shaft from the left side, through the left fork leg and wheel hub.
3. Align the end of front axle shaft (7) with the surface of fork leg (8).
4. Tighten the axle pinch bolts on the left fork leg to the specified torque:
   22 N·m (2.2 kgf·m , 16 lbf·ft)
5. Tighten the axle bolt to the specified torque:
   59 N·m (6.0 kgf·m , 43 lbf·ft)
6. Install the right and left caliper assemblies to the fork legs and tighten the fixing bolts to the specified torque:
   31 N·m (3.2 kgf·m , 23 lbf·ft)
   To avoid damaging the brake pads while installing the caliper assemblies, carefully fit both brake discs between the pads.
7. Operate the front brake and pump the fork several times.
   Check for free wheel rotation after the brake lever is released. Recheck the wheel if the brake drags or if the wheel does not rotate freely.

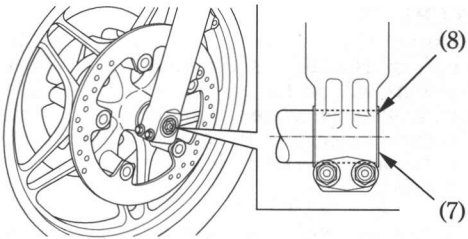

(7) End of front axle shaft
(8) Surface of fork leg

If the clearances between each surface of the brake disc and the brake caliper body (9) (not the brake pads) are symmetrical, follow next step.
If the clearances are not symmetrical, loosen the left axle pinch bolts and pull the left fork outward or push inward to adjust the clearance. Then follow the next step.

8. Tighten the axle pinch bolts on the right fork leg to specified torque:
   22 N·m (2.2 kgf·m , 16 lbf·ft)

   - Visually check that the clearances between each surface of the brake disc and the brake caliper body (not the brake pads) are symmetrical.

9. Remove the protective tapes from the front wheel.

If a torque wrench was not used for installation, see your Honda dealer as soon as possible to verify proper assembly. Improper assembly may lead to loss of braking capacity.

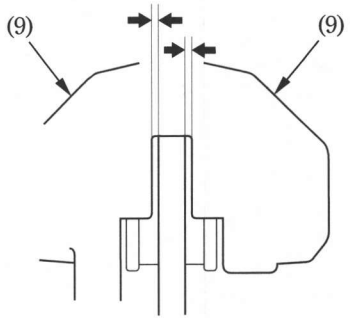

(9) Brake caliper body

Rear Wheel Removal

1. Place the motorcycle on its center stand.
2. Loosen the rear axle nut (1).
3. Loosen the drive chain adjusting bolts (2).
4. Remove the rear axle nut and washer.
5. Remove the drive chain (3) from the driven sprocket by pushing the rear wheel forward.
6. Remove the rear axle shaft (4), side collars and rear wheel from the swingarm.

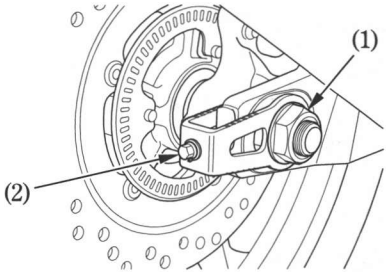

(1) Rear axle nut
(2) Adjusting bolts

Do not depress the brake pedal while the wheel is off the motorcycle. The caliper piston will be forced out of the cylinder with subsequent loss of brake fluid. If this occurs, servicing of the brake system will be necessary. See your Honda dealer for this service.

Avoid getting grease, oil, or dirt on the disc or pad surfaces. Any contamination can cause poor brake performance or rapid pad wear after reassembly.

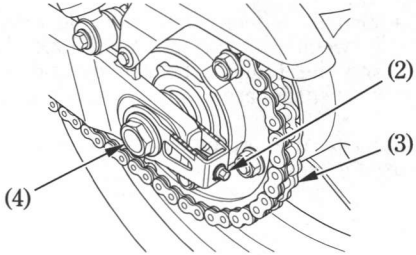

(3) Drive chain (4) Rear axle shaft

Rear Wheel Installation

- To install the rear wheel, reverse the removal procedure.
- Install the side collars into the left and right side wheel hub.
- Make sure that the lug (5) on the swingarm (6) is located in the slot (7) in the brake caliper holder (8).
- Tighten the rear axle nut to the specified torque. Rear axle nut torque:
  113 N·m (11.5 kgf·m , 83 lbf·ft)
- Adjust the drive chain (pages 99 – 100).

When installing the wheel, carefully fit the brake disc between the brake pads to avoid damaging the pads.

After installing the wheel, apply the brake several times and then check if the wheel rotates freely. Recheck the wheel if the brake drags or if the wheel does not rotate freely.

If a torque wrench was not used for installation, see your Honda dealer as soon as possible to verify proper assembly. Improper assembly may lead to loss of braking capacity.

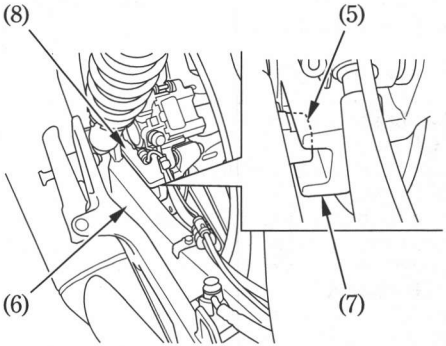

(5) Lug
(6) Swingarm
(7) Slot
(8) Brake caliper holder

BRAKE PAD WEAR

Refer to the Safety Precautions on page 79 .

Brake pad wear depends upon the severity of usage, the type of riding, and road conditions. (Generally, the pads will wear faster on wet and dirty roads.)
Inspect the pads at each regular maintenance interval (page 82).

Front Brake

Always inspect each pad in both right and left brake calipers.
〈**CB1100**〉
Check the wear indicator grooves (1) in each pad.
If either pad is worn to the bottom of the grooves, replace both pads as a set. See your Honda dealer for this service.
〈**CB1100A**〉
Check the cutout (2) in each pad.
If either pad is worn to the cutout, replace both pads as a set. See your Honda dealer for this service.

Illustration shows right side, left side similar.

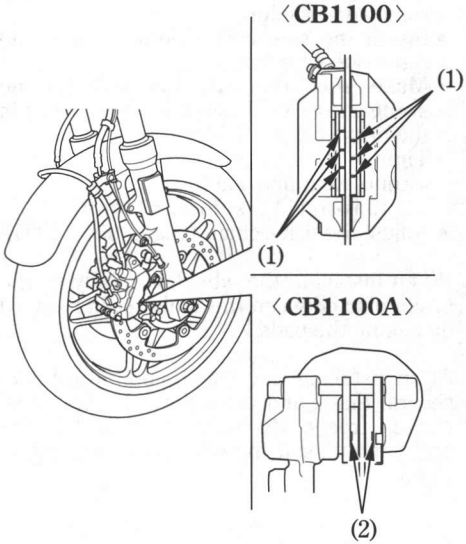

(1) Wear indicator grooves (2) Cutouts

Rear Brake

Check the cutout (2) in each pad.

If either pad is worn to the cutout, replace both pads as a set. See your Honda dealer for this service.

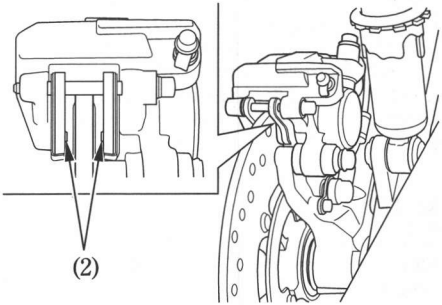

(2) Cutouts

BATTERY

Refer to the Safety Precautions on page 79 .

It is not necessary to check the battery electrolyte level or add distilled water as the battery is a maintenance-free (sealed) type. If your battery seems weak and/or is leaking electrolyte (causing hard starting or other electrical troubles), contact your Honda dealer.

NOTICE

Your battery is a maintenance-free type and can be permanently damaged if the cap strip is removed.

This symbol on the battery means that this product must not be treated as household waste.

NOTICE

An improperly disposed of battery can be harmful to the environment and human health.
Always confirm local regulations for battery disposal.

⚠ WARNING

The battery gives off explosive hydrogen gas during normal operation.

A spark or flame can cause the battery to explode with enough force to kill or seriously hurt you.

Wear protective clothing and a face shield, or have a skilled mechanic do the battery maintenance.

Removal:
The battery is in the battery box under the seat.

1. Make sure the ignition switch is OFF.
2. Remove the seat (page 53).
3. Remove the tool kit (page 83).
4. Remove the clip (1) (page 61) and screw (2), then remove the battery cover (3).

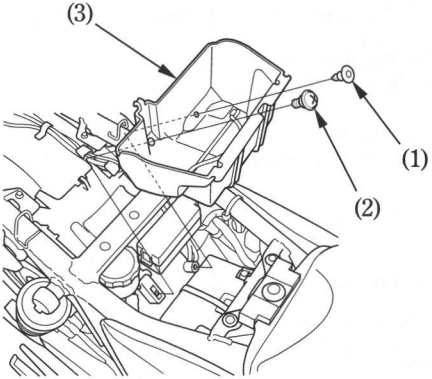

(1) Clip
(2) Screw
(3) Battery cover

5. Disconnect the negative (−) terminal lead (4) from the battery first, then disconnect the positive (+) terminal lead (5).
6. Pull out the battery (6) from the battery box.

Installation:
1. Reinstall in the reverse order of removal. Be sure to connect the positive (+) terminal first, then the negative (−) terminal.
2. Check all bolts and other fasteners are secure.

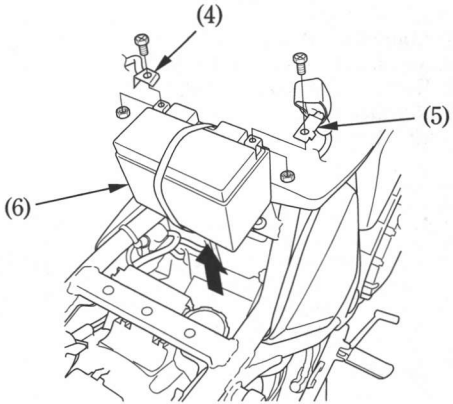

(4) Negative (−) terminal lead
(5) Positive (+) terminal lead
(6) Battery

FUSE REPLACEMENT

Refer to the Safety Precautions on page 79 .

When frequent fuse failure occurs, it usually indicates a short circuit or an overload in the electrical system. See your Honda dealer for repair.

NOTICE

Never use a fuse with a different rating from that specified. Serious damage to the electrical system or a fire may result, causing a dangerous loss of lights or engine power.

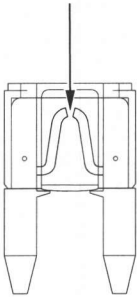

Fuse Box:
The fuse box (1) is located under the seat.
The specified fuses are:

10A ... CB1100
10A, 30A ... CB1100A

1. Remove the seat (page 53).
2. Release the tabs (2), then remove the fuse box cover (3).
3. Using the fuse remover provided in the tool kit (page 83), pull the old fuse out. If the fuse is blown, install a new fuse.
   The spare fuses (4) are located in the fuse box.
4. Install the fuse box cover and install the seat.

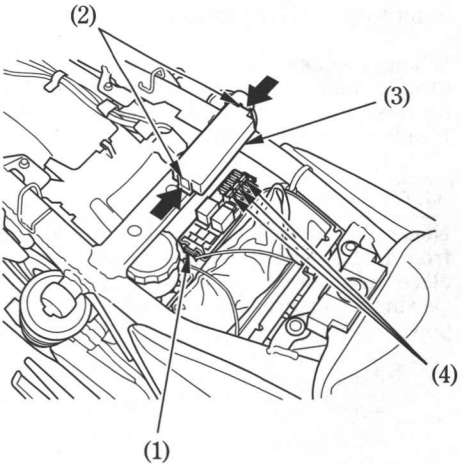

(1) Fuse box
(2) Tabs
(3) Fuse box cover
(4) Spare fuses

Main Fuse, FI Fuse:

The main fuse (1) and FI fuse (2) are located behind the left side cover.

The specified fuses are:

Main fuse **30A**

FI fuse **20A**

1. Remove the left side cover (page 59).
2. Release the tabs (3), then remove the starter magnetic switch cover (4).
3. Using the fuse remover provided in the tool kit (page 83), pull the old fuse out. If the fuse is blown, install a new fuse.
   The spare fuses are located in the fuse box (page118).
4. Install the starter magnetic switch cover and left side cover.

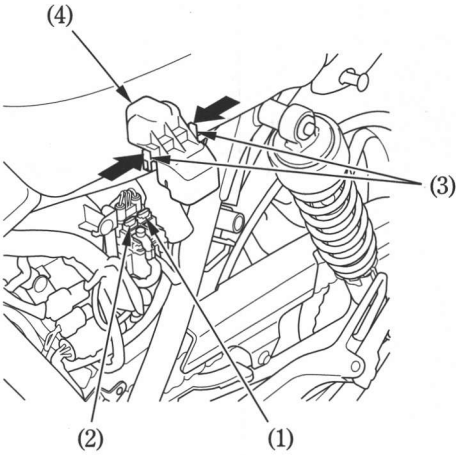

(1) Main fuse
(2) FI fuse
(3) Tabs
(4) Starter magnetic switch cover

BRAKELIGHT SWITCH ADJUSTMENT

Refer to the Safety Precautions on page 79 .

Check the operation of the brakelight switch (1) at the right side behind the engine from time to time.
Adjustment is done by turning the adjusting nut (2). Turn the nut in the direction (A) if the switch operates too late and in direction (B) if the switch operates too soon.

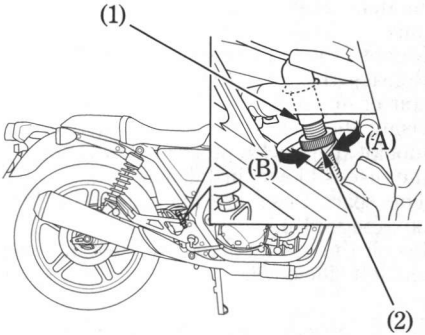

(1) Brakelight switch
(2) Adjusting nut

BULB REPLACEMENT

Refer to the Safety Precautions on page 79 .

The light bulb becomes very hot while the light is ON, and remains hot for a while after it is turned OFF. Be sure to let it cool down before servicing.

Do not put finger prints on the headlight bulb, as they may create hot spots on the bulb and cause it to break.
Wear clean gloves while replacing the bulb.
If you touch the bulb with your bare hands, clean it with a cloth moistened with alcohol to prevent its early failure.

- Be sure to turn the ignition switch OFF when replacing the bulb.
- Do not use bulbs other than those specified.
- After installing a new bulb, check that the light operates properly.

Headlight Bulb

1. Remove the screws (1) from the headlight case.
2. Gently pull the lower end of the headlight (2) forward and remove the headlight.
3. Disconnect the connector (3) by pressing tabs (4).
4. Remove the seat rubber (5).
5. Remove the bulb (6) while pressing down on the pin (7).
6. Install a new bulb in the reverse order of removal.
   - Install the seat rubber with its "TOP" mark (8) facing up.

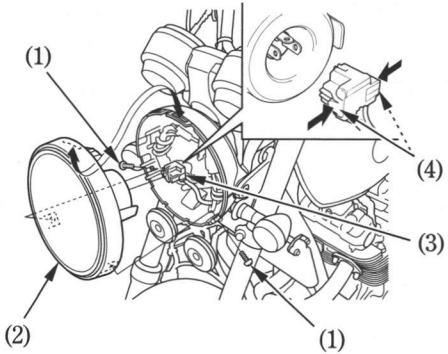

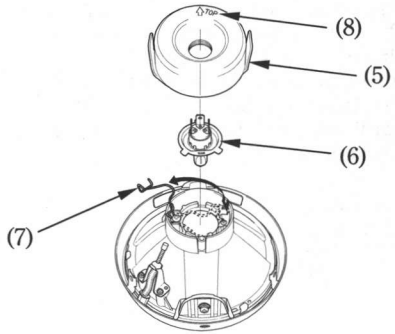

(1) Screws
(2) Headlight
(3) Connector
(4) Tabs
(5) Seat rubber
(6) Bulb
(7) Pin
(8) "TOP" mark

Front/Rear Turn Signal Bulb

1. Remove the turn signal lens (1) by removing the screw (2).
2. Slightly press the bulb (3) and turn it counterclockwise.
3. Install a new bulb in the reverse order of removal.

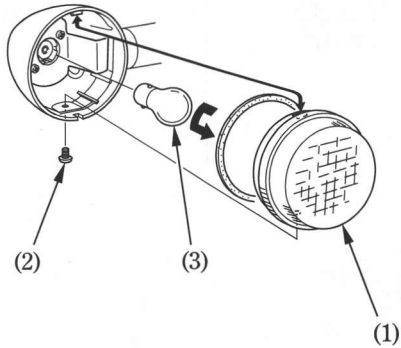

(1) Turn signal lens
(2) Screw
(3) Bulb

Brake/Tail Light Bulb

1. Remove the taillight lens (1) by removing the bolts (2).
2. Turn the socket (3) counterclockwise, then pull it out.
3. Slightly press the bulb (4) and turn it counterclockwise.
4. Install a new bulb in the reverse order of removal.

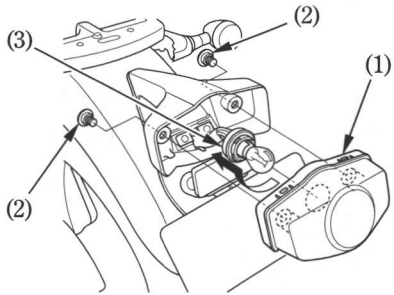

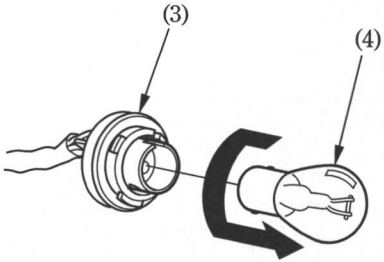

(1) Taillight lens
(2) Bolts
(3) Socket

(4) Bulb

CLEANING

Clean your motorcycle regularly to protect the surface finishes and inspect for damage, wear, and oil or brake fluid leakage.

Avoid cleaning products that are not specifically designed for motorcycle or automobile surfaces.
They may contain harsh detergents or chemical solvents that could damage the metal, paint, and plastic on your motorcycle.

If your motorcycle is still warm from recent operation, give the engine and exhaust system time to cool off.

We recommend avoiding the use of high pressure water spray (typical in coin-operated car washes).

NOTICE

High pressure water (or air) can damage certain parts of the motorcycle.

Washing the Motorcycle

1. Rinse the motorcycle thoroughly with cool water to remove loose dirt.
2. Clean the motorcycle with a sponge or soft cloth using cool water.
   Avoid directing water to muffler outlets and electrical parts.
3. Clean the plastic parts using a cloth or sponge dampened with a solution of mild detergent and water. Rub the soiled area gently rinsing it frequently with fresh water.
   Take care to keep brake fluid or chemical solvents off the motorcycle.
   They will damage the plastic and painted surfaces.

The inside of the headlight lens may be clouded immediately after washing the motorcycle. Moisture condensation inside the headlight lens will disappear gradually by lighting the headlight in high beam. Run the engine while keeping the headlight on.

4. After cleaning, rinse the motorcycle thoroughly with plenty of clean water. Strong detergent residue can corrode alloy parts.
5. Dry the motorcycle, start the engine, and let it run for several minutes.
6. Test the brakes before riding the motorcycle. Several applications may be necessary to restore normal braking performance.
7. Lubricate the drive chain immediately after washing and drying the motorcycle.

Braking efficiency may be temporarily impaired immediately after washing the motorcycle.
Anticipate longer stopping distance to avoid a possible accident.

Finishing Touches
After washing your motorcycle, consider using a commercially-available spray cleaner/polish or quality liquid or paste wax to finish the job. Use only a non-abrasive polish or wax made specifically for motorcycles or automobiles. Apply the polish or wax according to the instructions on the container.

Removing Road Salt

Road Salt used on roads during winter and salt from seawater causes rust.
Wash your motorcycle as follows after it has run through salty water or on roads treated with Road Salt.

1. Clean the motorcycle using cool water (page 125).

Do not use warm water.
This worsens the effect of the salt.

2. Dry the motorcycle and make sure the metal is protected with the wax.

Painted Aluminum Wheel Maintenance

Aluminum may corrode from contact with dirt, mud, or road salt. Clean the wheels after riding through any of these substances. Use a wet sponge and mild detergent. Avoid stiff brushes, steel wool, or cleaners containing abrasives or chemical compounds.

After washing, rinse with plenty of water and dry with a clean cloth.

Clean the Mat Painted Surface

Using plenty of water, clean the mat painted surface with a soft cloth or sponge. Dry with a soft, clean cloth.

Use neutral detergent to clean mat painted surface.

Do not use waxes containing compounds.

Exhaust Pipe and Muffler Maintenance

The exhaust pipe and muffler are stainless steel but may become stained by mud or dust.

To remove mud or dust, use a wet sponge and a liquid kitchen abrasive, then rinse well with clean water. Dry with chamois or a soft towel.

If necessary, remove heat stains by using a commercially available fine texture compound. Then rinse by the same manner as removing mud or dust.

STORAGE GUIDE

Extended storage, such as for winter, requires that you take certain steps to reduce the effects of deterioration from non-use of the motorcycle. In addition, necessary repairs should be made BEFORE storing the motorcycle; otherwise, these repairs may be forgotten by the time the motorcycle is removed from storage.

STORAGE

1. Change the engine oil and filter.
2. Empty the fuel tank into an approved petrol container using a commercially available hand siphon or an equivalent method. Spray the inside of the tank with an aerosol rust-inhibiting oil.
   Reinstall the fuel fill cap on the tank.

⚠ WARNING

Petrol is highly flammable and explosive. You can be burned or seriously injured when handling fuel.

- Stop the engine and keep heat, sparks, and flame away.
- Refuel only outdoors.
- Wipe up spills immediately.

3. To prevent rusting in the cylinders, perform the following:
   - Remove the spark plug caps from the spark plugs. Using tape or string, secure the caps to any convenient plastic body part so that they are positioned away from the spark plugs.
   - Remove the spark plugs from the engine and store them in a safe place. Do not connect the spark plugs to the spark plug caps.
   - Pour a tablespoon (15 – 20 cm^3) of clean engine oil into each cylinder and cover the spark plug holes with a piece of cloth.
   - Crank the engine several times to distribute the oil.
   - Reinstall the spark plugs and spark plug caps.
4. Remove the battery. Store in an area protected from freezing temperatures and direct sunlight.
   Slow charge the battery once a month.
5. Wash and dry the motorcycle. Wax all painted surfaces. Coat chrome with rustinhibiting oil.
6. Lubricate the drive chain (page 102).
7. Inflate the tyres to their recommended pressures. Place the motorcycle on blocks to raise both tyres off the ground.
8. Cover the motorcycle (don't use plastic or other coated materials) and store in an unheated area, free of dampness with a minimum of daily temperature variation. Do not store the motorcycle in direct sunlight.

REMOVAL FROM STORAGE

1. Uncover and clean the motorcycle.
2. Change the engine oil if more than 4 months have passed since the start of storage.
3. Charge the battery as required. Install the battery.
4. Drain any excess aerosol rust-inhibiting oil from the fuel tank. Fill the fuel tank with fresh petrol.
5. Perform all Pre-ride Inspection checks (page 62).
   Test ride the motorcycle at low speeds in a safe riding area away from traffic.

TAKING CARE OF THE UNEXPECTED

IF YOU CRASH

Personal safety is your first priority after a crash. If you or anyone else has been injured, take time to assess the severity of the injuries and whether it is safe to continue riding. Call for emergency assistance if needed. Also follow applicable laws and regulations if another person or vehicle is involved in the crash.

If you decide that you are capable of riding safely, first evaluate the condition of your motorcycle. If the engine is still running, turn it off and look it over carefully; inspect it for fluid leaks, check the tightness of critical nuts and bolts, and secure such parts as the handlebar, control levers, brakes, and wheels.

If there is minor damage, or you are unsure about possible damage, ride slowly and cautiously. Sometimes, crash damage is hidden or not immediately apparent, so you should have your motorcycle thoroughly checked at a qualified service facility as soon as possible. Also, be sure to have your Honda dealer check the frame and suspension after any serious crash.

SPECIFICATIONS

DIMENSIONS

Overall length	2,195 mm (86.4 in)
Overall width	835 mm (32.9 in)
Overall height	1,130 mm (44.5 in)
Wheelbase	1,490 mm (58.7 in)

CAPACITIES

Engine oil	After draining	3.8 ℓ (4.0 US qt , 3.3 Imp qt)
	After draining and oil filter change	3.9 ℓ (4.1 US qt , 3.4 Imp qt)
	After disassembly	4.9 ℓ (5.2 US qt , 4.3 Imp qt)
Fuel tank		14.6 ℓ (3.86 US gal , 3.21 Imp gal)
Passenger capacity		Operator and one passenger
Maximum weight capacity		172 kg (379 lb)

ENGINE

Bore and stroke	73.5 × 67.2 mm (2.89 × 2.65 in)
Compression ratio	9.5 : 1
Displacement	1,140 cm^3 (69.5 cu-in)
Spark plug	
Standard	LMAR8A-9S (NGK)
Spark plug gap	0.8 – 0.9 mm (0.03 – 0.04 in)
Idle speed	1,100 ± 100 min^{-1} (rpm)
Valve clearance (Cold)	Intake 0.15 mm (0.006 in) Exhaust 0.28 mm (0.011 in)

CHASSIS AND SUSPENSION

Caster	27°00′
Trail	114 mm (4.5 in)
Tyre size, front	110/80R18M/C 58V BRIDGESTONE BT-54F RADIAL G DUNLOP D205F
Tyre size, rear	140/70R18M/C 67V BRIDGESTONE BT-54R RADIAL G DUNLOP D205
Tyre type	radial, tubeless

POWER TRANSMISSION

Primary reduction	1.652
Gear ratio, 1st	3.166
2nd	2.062
3rd	1.545
4th	1.250
5th	1.111
Final reduction	2.166

ELECTRICAL

Battery		12V – 11.2Ah (10HR) / 11.8Ah (20HR)
Generator		0.336 kW/5,000 min^{-1} (rpm)

LIGHTS

Headlight		12V – 60/55W
Brake/Tail light		12V – 21/5W
Turn signal light	Front	12V – 21W × 2
	Rear	12V – 21W × 2

FUSE

Main fuse	30A
FI fuse	20A
Other fuses	10A ... CB1100
	10A, 30A ... CB1100A

CATALYTIC CONVERTER

This motorcycle is equipped with a catalytic converter.
The catalytic converter contains precious metals that serve as catalysts, promoting chemical reactions to convert the exhaust gasses without affecting the metals.
The catalytic converter acts on HC, CO, and NOx. A replacement unit must be an original Honda part or its equivalent.

The catalytic converter must operate at a high temperature for the chemical reactions to take place. It can set on fire any combustible materials that come near it. Park your motorcycle away from high grasses, dry leaves, or other flammables.

A defective catalytic converter contributes to air pollution, and can impair your engine's performance. Follow these guidelines to protect your motorcycle's catalytic converter.

- Always use unleaded petrol. Even a small amount of leaded petrol can contaminate the catalyst metals, making the catalytic converter ineffective.

- Keep the engine in good running condition.
  A poorly running engine can cause the catalytic converter to overheat causing damage to the converter or the motorcycle.

- If your engine is misfiring, backfiring, stalling, or otherwise not running properly, stop riding and turn off the engine. Have your motorcycle serviced as soon as possible.